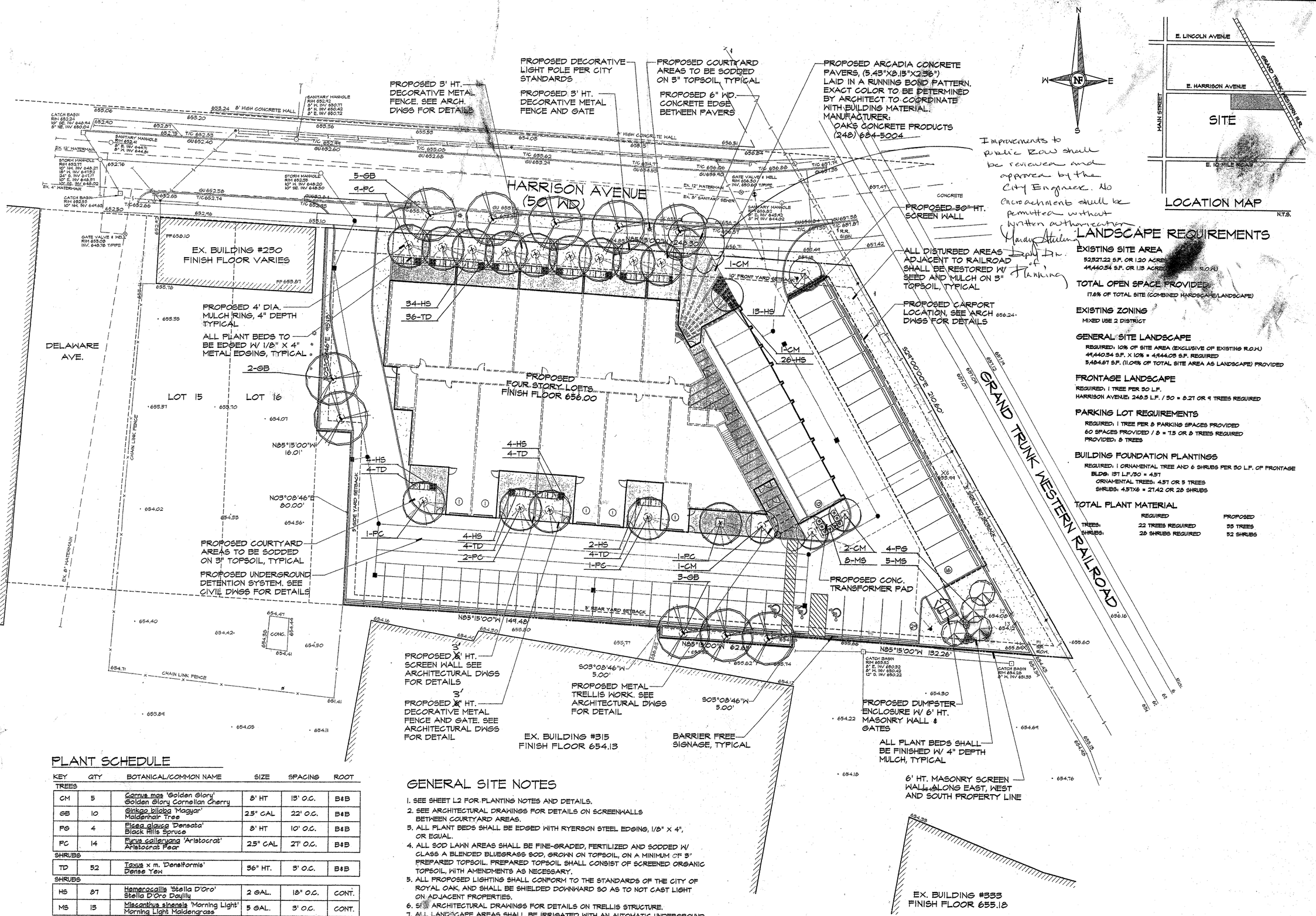

Improvements to public ROW shall be reviewed and approved by the City Engineer. No encroachments shall be permitted without written authorization.

Mandy Stilwell Dpty Dir. of Planning

LOCATION MAP
N.T.S.

LANDSCAPE REQUIREMENTS

EXISTING SITE AREA
52,521.22 S.F. OR 1.20 ACRES
44,440.54 S.F. OR 1.13 ACRES (EXCLUSIVE OF R.O.W.)

TOTAL OPEN SPACE PROVIDED
17.6% OF TOTAL SITE (COMBINED HARDSCAPE/LANDSCAPE)

EXISTING ZONING
MIXED USE 2 DISTRICT

GENERAL SITE LANDSCAPE
REQUIRED: 10% OF SITE AREA (EXCLUSIVE OF EXISTING R.O.W.)
44,440.54 S.F. X 10% = 4,444.05 S.F. REQUIRED
5,484.87 S.F. (11.04% OF TOTAL SITE AREA AS LANDSCAPE) PROVIDED

FRONTAGE LANDSCAPE
REQUIRED: 1 TREE PER 30 L.F.
HARRISON AVENUE: 248.3 L.F. / 30 = 8.27 OR 9 TREES REQUIRED

PARKING LOT REQUIREMENTS
REQUIRED: 1 TREE PER 8 PARKING SPACES PROVIDED
60 SPACES PROVIDED / 8 = 7.5 OR 8 TREES REQUIRED
PROVIDED: 8 TREES

BUILDING FOUNDATION PLANTINGS
REQUIRED: 1 ORNAMENTAL TREE AND 6 SHRUBS PER 50 L.F. OF FRONTAGE
BLDG: 137 L.F./30 = 4.57
ORNAMENTAL TREES: 4.57 OR 5 TREES
SHRUBS: 4.57X6 = 27.42 OR 28 SHRUBS

TOTAL PLANT MATERIAL

	REQUIRED	PROPOSED
TREES:	22 TREES REQUIRED	55 TREES
SHRUBS:	28 SHRUBS REQUIRED	52 SHRUBS

PLANT SCHEDULE

KEY	QTY	BOTANICAL/COMMON NAME	SIZE	SPACING	ROOT
TREES					
CM	5	Cornus mas 'Golden Glory' Golden Glory Cornelian Cherry	8' HT	15' O.C.	B&B
GB	10	Ginkgo biloba 'Magyar' Maidenhair Tree	2.5" CAL	22' O.C.	B&B
PG	4	Picea glauca 'Densata' Black Hills Spruce	8' HT	10' O.C.	B&B
PC	14	Pyrus calleryana 'Aristocrat' Aristocrat Pear	2.5" CAL	27' O.C.	B&B
SHRUBS					
TD	52	Taxus x m. 'Densiformis' Dense Yew	36" HT.	5' O.C.	B&B
SHRUBS					
HS	87	Hemerocallis 'Stella D'Oro' Stella D'Oro Daylily	2 GAL.	18" O.C.	CONT.
MS	13	Miscanthus sinensis 'Morning Light' Morning Light Maidengrass	5 GAL.	3' O.C.	CONT.

GENERAL SITE NOTES

1. SEE SHEET L2 FOR PLANTING NOTES AND DETAILS.
2. SEE ARCHITECTURAL DRAWINGS FOR DETAILS ON SCREENWALLS BETWEEN COURTYARD AREAS.
3. ALL PLANT BEDS SHALL BE EDGED WITH RYERSON STEEL EDGING, 1/8" X 4", OR EQUAL.
4. ALL SOD LAWN AREAS SHALL BE FINE-GRADED, FERTILIZED AND SODDED W/ CLASS A BLENDED BLUEGRASS SOD, GROWN ON TOPSOIL, ON A MINIMUM OF 3" PREPARED TOPSOIL. PREPARED TOPSOIL SHALL CONSIST OF SCREENED ORGANIC TOPSOIL, WITH AMENDMENTS AS NECESSARY.
5. ALL PROPOSED LIGHTING SHALL CONFORM TO THE STANDARDS OF THE CITY OF ROYAL OAK, AND SHALL BE SHIELDED DOWNWARD SO AS TO NOT CAST LIGHT ON ADJACENT PROPERTIES.
6. SEE ARCHITECTURAL DRAWINGS FOR DETAILS ON TRELLIS STRUCTURE.
7. ALL LANDSCAPE AREAS SHALL BE IRRIGATED WITH AN AUTOMATIC UNDERGROUND IRRIGATION SYSTEM.

0 10 20 40 60 80 1"=20'

NOWAK & FRAUS
Consulting Engineers
Land Surveyors
Land Planners
1310 N. Stephenson Highway
Royal Oak, MI 48067-1508
Tel. (248) 399-0886
Fax. (248) 399-0805

SEAL

PROJECT
Metro Lofts

CLIENT
Neumann Smith & Associates
400 Galleria Officentre
Suite 555
Southfield, MI 48034
T: (248) 352-8310

PROJECT LOCATION
Part of the SW. 1/4 of Section 22
T. 1 North, R. 11 East
City of Royal Oak, Oakland Co., MI

SHEET
LANDSCAPE PLAN

3 WORKING DAYS BEFORE YOU DIG CALL MISS DIG 1-800-482-7171

DATE/ REVISION
11/28/03 SITE PLAN AND R/U APPROVAL RESUBMITTAL

DRAWN BY: G. Ostrowski
DESIGNED BY: G. Ostrowski
APPROVED BY: G. Ostrowski
DATE: 11/10/03
SCALE: 1" = 20'

N/F JOB NO. D040
SHEET NO. L1

GENERAL LANDSCAPE NOTES

1. LANDSCAPE CONTRACTOR SHALL VISIT SITE, INSPECT EXISTING CONDITIONS AND REVIEW PROPOSED PLANTING AND RELATED WORK. IN CASE OF DISCREPANCY BETWEEN PLAN AND PLANT LIST, THE PLAN SHALL GOVERN QUANTITIES. CONTACT THE LANDSCAPE ARCHITECT WITH ANY CONCERNS.
2. THE CONTRACTOR SHALL VERIFY LOCATIONS OF ALL ON-SITE UTILITIES PRIOR TO BEGINNING CONSTRUCTION ON HIS/HER PHASE OF WORK. ANY DAMAGE OR INTERUPTION OF SERVICES SHALL BE THE RESPONSIBILITY OF THE CONTRACTOR.
3. THE CONTRACTOR SHALL COORDINATE ALL RELATED ACTIVITIES WITH OTHER TRADES, AND SHALL REPORT ANY UNACCEPTABLE SITE CONDITIONS TO THE OWNER'S REPRESENTATIVE PRIOR TO COMMENCEMENT. PLANTS SHALL BE FULL, WELL-BRANCHED, AND IN HEALTHY VIGOROUS GROWING CONDITION.
4. PLANTS SHALL BE WATERED BEFORE AND AFTER PLANTING IS COMPLETE.
5. ALL TREES MUST BE STAKED, FERTILIZED AND MULCHED AND SHALL BE GUARANTEED TO EXHIBIT A NORMAL GROWTH CYCLE FOR AT LEAST TWO (2) YEARS FOLLOWING PLANTING.
6. ALL MATERIAL SHALL CONFORM TO THE GUIDELINES ESTABLISHED IN THE MOST RECENT EDITION OF THE "AMERICAN STANDARDS FOR NURSERY STOCK".
7. CONTRACTOR WILL SUPPLY FINISHED GRADE AND EXCAVATE AS NECESSARY TO SUPPLY PLANT MIX DEPTH IN ALL PLANTING BEDS AS INDICATED IN PLANT DETAILS AND A DEPTH OF 4" IN ALL LAWN AREAS.
8. PROVIDE CLEAN BACKFILL SOIL, USING MATERIAL STOCKPILED ON-SITE. SOIL SHALL BE SCREENED AND FREE OF DEBRIS, FOREIGN MATERIAL, AND STONE.
9. SLOW-RELEASE FERTILIZER SHALL BE ADDED TO THE PLANT PITS BEFORE BEING BACKFILLED. APPLICATION SHALL BE AT THE MANUFACTURERS RECOMMENDED RATES.
10. AMENDED PLANT MIX (PREPARED TOPSOIL) SHALL CONSIST OF 1/3 SCREENED TOPSOIL, 1/3 SAND, AND 1/3 PEAT, MIXED WELL AND SPREAD TO A DEPTH AS INDICATED IN PLANTING DETAILS.
11. ALL PLANTINGS SHALL BE MULCHED WITH SHREDDED HARDWOOD BARK, SPREAD TO A DEPTH OF 4" FOR TREES AND SHRUBS, AND 2" ON ANNUALS, PERENNIALS, AND GROUNDCOVER PLANTINGS. MULCH SHALL BE FREE FROM DEBRIS AND FOREIGN MATERIAL, AND PIECES ON INCONSISTENT SIZE.
12. NO SUBSTITUTIONS OR CHANGES OF LOCATION, OR PLANT TYPE SHALL BE MADE WITHOUT THE APPROVAL OF THE LANDSCAPE ARCHITECT OR OWNERS REPRESENTATIVE.
13. THE LANDSCAPE ARCHITECT SHALL BE NOTIFIED OF ANY DISCREPANCIES BETWEEN THE PLANS AND FIELD CONDITIONS PRIOR TO INSTALLATION.
14. THE LANDSCAPE CONTRACTOR SHALL BE RESPONSIBLE FOR MAINTAININS ALL PLANT MATERIAL IN A VERTICAL CONDITION THROUGHOUT THE GUARANTEED PERIOD.
15. THE LANDSCAPE ARCHITECT OR OWNERS REPRESENTATIVE SHALL HAVE THE RIGHT TO REJECT ANY WORK OR MATERIAL THAT DOES NOT MEET THE REQUIREMENTS OF THE PLANS AND/OR SPECIFICATIONS.
16. THE LANDSCAPE CONTRACTOR SHALL SEED AND MULCH OR SOD (AS INDICATED ON PLANS) ALL AREAS DESIGNATED AS SUCH ON THE PLANS, THROUGHOUT THE CONTRACT LIMITS. FURTHER, THE CONTRACTOR SHALL BE RESPONSIBLE FOR RESTORING AREAS DISTURBED DURING CONSTRUCTION, NOT IN THE CONTRACT LIMITS, TO EQUAL OR GREATER CONDITION.
17. ALL LANDSCAPE AREAS SHALL HAVE PROPER DRAINAGE THAT PREVENTS EXCESSIVE WATER FROM PONDING ON LAWN AREAS OR AROUND TREES AND SHRUBS.
18. ALL LANDSCAPE AREAS SHALL BE IRRIGATED WITH AN AUTOMATIC UNDERGROUND SYSTEM.

PLANT MIX SPECIFICATION

PLANT MIX SHALL BE PROVIDED FOR ALL PROPOSED PLANTINGS. PLANT MIX SHALL BE COMPOSED OF:

1/3 SCREENED TOPSOIL
1/3 CLEAN COARSE SAND
1/3 PEAT MOSS

PLANT MIX FOR ANNUAL, PERENNIAL AND GROUNDCOVER PLANTINGS SHALL INCLUDE AMENDMENT WITH FERTILIZER PER THE RATES DESCRIBED BELOW:

FERTILIZERS FOR ANNUAL, PERENNIAL AND GROUNDCOVER PLANTINGS:
"DRIMANURE"; OR APPROVED EQUAL APPLIED AT THE MANUFACTURERS RECOMMENDED RATES
13:13:13 FERTILIZER; APPLIED AT THE MANUFACTURERS RECOMMENDED RATES
BONE MEAL; APPLIED AT 5 LBS PER CUBIC YARD OF SOIL MIX

GENERAL NOTES

1. ALL LANDSCAPE ISLANDS SHALL BE BACKFILLED WITH A SAND MIXTURE TO FACILITATE DRAINAGE.
2. ALL PROPOSED LANDSCAPE ISLANDS SHALL BE CURBED.
3. ALL LANDSCAPE AREAS SHALL BE IRRIGATED.
4. OVERHEAD UTILITY LINES AND POLES TO BE RELOCATED SHALL BE COORDINATED AND MOVED AS DIRECTED BY THE UTILITY COMPANY OF RECORD.
5. EVERGREEN AND CANOPY TREES SHALL BE PLANTED A MINIMUM OF 10' FROM A FIRE HYDRANT AND MANHOLE, AND 15' FROM OVERHEAD WIRES.
6. ALL PLANT MATERIAL SHALL BE GUARANTEED FOR ONE (1) YEAR AFTER PLANTING AND SHALL BE INSTALLED AND MAINTAINED ACCORDING TO THE CITY OF ROYAL OAK STANDARDS.
7. ALL PROPOSED TREES SHALL BE PLANTED A MINIMUM OF 5' FROM THE BACK OF CURB AND PROPOSED WALKS.
8. ALL TREE AND SHRUB PLANTING BEDS SHALL BE MULCHED WITH SHREDDED HARDWOOD BARK, SPREAD TO A MINIMUM DEPTH OF 4". ALL LAWN AREA TREES SHALL HAVE A 4' DIAMETER CIRCLE OF SHREDDED HARWOOD MULCH, 3" MINIMUM AWAY FROM TRUNK. ALL PERENNIAL, ANNUAL, AND GROUNDCOVER BEDS SHALL RECEIVE 2-3" OF DARK COLORED BARK MULCH. MULCH IS TO BE FREE FROM DEBRIS AND FOREIGN MATERIAL, AND SHALL CONTAIN NO PIECES OF INCONSISTENT SIZE.

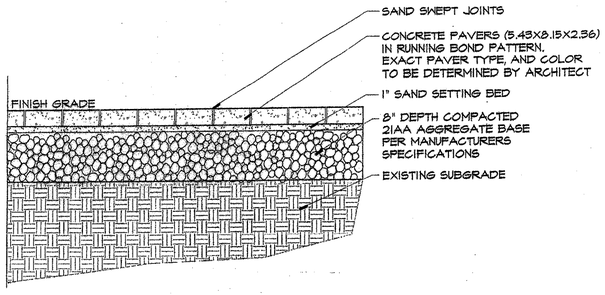

CONCRETE PAVER WALK SECTION

NTS

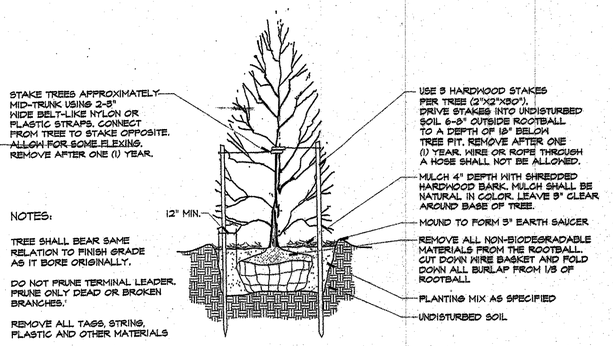

EVERGREEN TREE PLANTING DETAIL

NTS

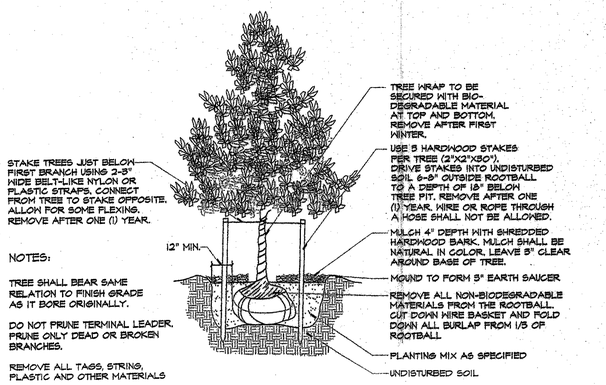

DECIDUOUS TREE PLANTING DETAIL

NTS

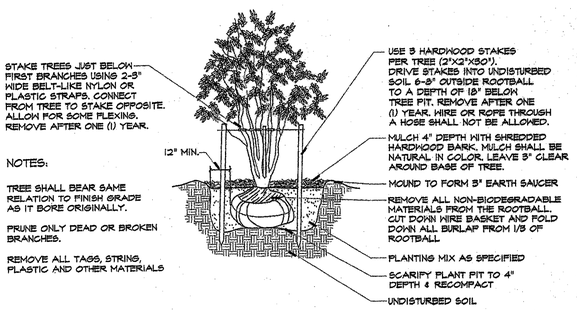

MULTI-STEM TREE PLANTING DETAIL

NTS

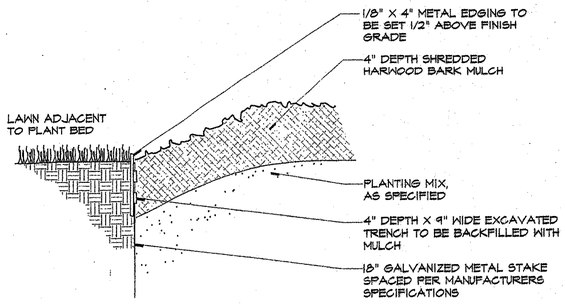

METAL EDGING DETAIL

NTS

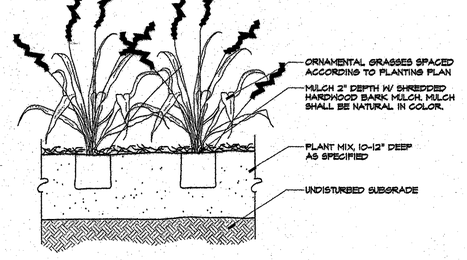

ORNAMENTAL GRASS PLANTING DETAIL

NTS

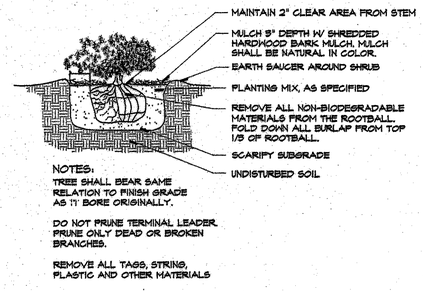

SHRUB PLANTING DETAIL

EVERGREEN SHRUB

NTS

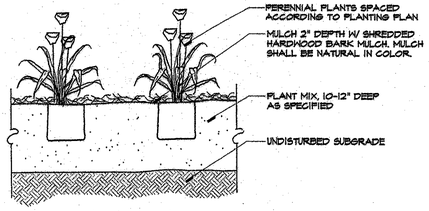

PERENNIAL PLANTING DETAIL

NTS

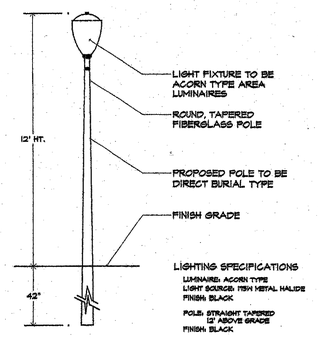

PROPOSED LIGHTING DETAIL

NTS

GENERAL GRADING NOTES:

1. PROVIDE POSITIVE DRAINAGE AWAY FROM BUILDINGS, TYPICAL.
2. PROVIDE POSITIVE DRAINAGE ON ALL WALKS.
3. CONTRACTOR TO CONTACT CIVIL ENGINEER OR LANDSCAPE ARCHITECT WITH ANY DISCREPANCIES BETWEEN GRADES SHOWN AND ACTUAL GRADES ON-SITE. DO NOT MAKE ADJUSTMENTS WITHOUT THE APPROVAL OF THE CIVIL ENGINEER OR LANDSCAPE ARCHITECT.
4. SEE CIVIL ENGINEERING DRAWINGS FOR PROPOSED GRADES FOR ALL ROADS, CURBS, BUILDINGS, UTILITIES, ETC.

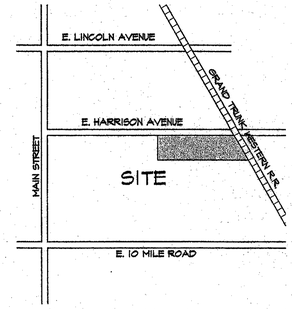

LOCATION MAP

N.T.S.

NOWAK & FRAUS

Consulting Engineers
Land Surveyors
Land Planners

1310 N. Stephenson Highway
Royal Oak, MI 48067-1508
Tel. (248) 399-0886
Fax. (248) 399-0805

SEAL

STATE OF MICHIGAN — GEORGE A. NOWAK — No. 1310 — REGISTERED LANDSCAPE ARCHITECT

PROJECT
Metro Lofts

CLIENT
Neumann Smith & Associates
400 Galleria Officentre
Suite 555
Southfield, MI 48034
T: (248) 352-8310

PROJECT LOCATION
Part of the SW. 1/4 of Section 22
T. 1 North, R. 11 East
City of Royal Oak, Oakland Co., MI

SHEET
LANDSCAPE NOTES & DETAILS

3 WORKING DAYS BEFORE YOU DIG CALL MISS DIG. 1-800-482-7171

DATE/ REVISION
11/28/03 SITE PLAN AND SLU APPROVAL RESUBMITTAL

DRAWN BY: G. Ostrowski
DESIGNED BY: G. Ostrowski
APPROVED BY: G. Ostrowski
DATE: 11/10/03
SCALE: VARIES

N/F JOB NO. D040
SHEET NO. L2

Metro Lofts Royal Oak, Michigan

OWNER: Denali Development Group
37 Cambridge
Pleasant Ridge, MI 48069
248.399.6657

ARCHITECT: Neumann/Smith & Associates
400 Galleria Officentre, Suite 555
Southfield, Michigan 48034
248.352.8310
248.352.1821 (Fax)

CIVIL ENGINEER: Nowak & Fraus
1310 N. Stephenson Hwy.
Royal Oak, MI 48067
248.399.0886
248.399.0805 (Fax)

STRUCTURAL ENGINEER: Penhale & Yates
29200 Southfield Suite 207
Southfield, MI 48076
248.569.4446
248.569.5155 (Fax)

Index of Drawings

5.28.04 FOR BIDS	5.21.04 FOUNDATION	NO.	SHEET TITLE
●	○	A100	TITLE SHEET & DRAWING INDEX
			CIVIL
●		~~C1~~ L1	~~CARPET PLAN~~
●		C1	BOUNDARY/TOPOGRAPHIC/TREE SURVEY
●		C2	DEMOLITION PLAN
●		C3	PAVING AND GRADING PLAN
●		C4	UTILITY PLAN
●		C5	STORM SEWER PROFILE PLAN
●		C6	SOIL EROSION/DRAINAGE AREA PLAN
●		C7	ENGINEERING SITE PLAN (FOR REFERENCE ONLY)
		C8	CITY OF ROYAL OAK STANDARD STORM DETAILS
		C9	CITY OF ROYAL OAK STANDARD SEWER DETAILS
		C10	CITY OF ROYAL OAK STANDARD SEWER DETAILS
		C11	CITY OF ROYAL OAK STANDARD SEWER DETAILS
◑		L1	LANDSCAPE PLAN
◑		L2	LANDSCAPE DETAILS
			ARCHITECTURAL
●		A101	ROOM FINISH SCHEDULE AND WALL TYPES
●		A102	DOOR SCHEDULE AND DETAILS
●	○	A201	FIRST FLOOR PLAN
●	○	A202	SECOND FLOOR PLAN
●	○	A203	THIRD FLOOR PLAN
●	○	A204	FOURTH FLOOR PLAN
●	○	A205	ROOF PLAN
●		A210	ENLARGED UNIT PLANS
●		A211	ENLARGED UNIT PLANS
●		A212	ENLARGED UNIT PLANS
●		A213	ENLARGED UNIT PLANS
●		A214	ENLARGED UNIT PLANS
●		A215	ENLARGED UNIT PLANS
●		A216	ENLARGED UNIT PLANS
●		A217	ENLARGED UNIT PLANS
●		A218	ENLARGED UNIT PLANS
●		A219	ENLARGED UNIT PLANS
●		A220	ENLARGED UNIT PLANS
●	○	A301	BUILDING ELEVATIONS
●	○	A302	BUILDING ELEVATIONS
●	○	A303	BUILDING ELEVATIONS
●	○	A310	BUILDING CROSS SECTION
●	○	A311	CROSS SECTION AT STAIR 1
●	○	A312	SECTION AT STAIR 1/LOBBY LOOKING WEST
●	○	A313	SECTION AT STAIR 1/LOBBY LOOKING EAST
●	○	A314	ELEVATOR HOISTWAY SECTION AND DETAILS
●		A401	WALL SECTIONS
●		A402	WALL SECTIONS
●		A403	WALL SECTIONS
●		A404	WALL SECTIONS
●		A405	WALL SECTIONS
●		A406	WALL SECTIONS
●		A407	WALL SECTIONS
●		A408	WALL SECTIONS
●		A410	ENLARGED DETAILS
●		A411	ENLARGED DETAILS
●		A412	ENLARGED DETAILS
●		A420	PLAN DETAILS
●		A421	PLAN DETAILS
●		A700	INTERIOR ELEVATIONS
●		A701	INTERIOR ELEVATIONS
●		A702	INTERIOR ELEVATIONS
●		A800	INTERIOR DETAILS
			STRUCTURAL
●	●	S001	GENERAL STRUCTURAL NOTES
●	●	S002	TYPICAL DETAILS
●	●	S100	FOUNDATION PLAN
●	●	S100A	FLOOR SLAB JOINT PLAN
●	●	S101	FOUNDATION DETAILS
●		S200	SECOND FLOOR FRAMING PLAN
●		S300	THIRD FLOOR FRAMING PLAN
●		S400	FOURTH FLOOR AND LOW ROOF FRAMING PLAN
●		S500	HIGH ROOF FRAMING PLAN
●		S600	SECTIONS AND DETAILS
●		S601	SECTIONS AND DETAILS
			MECHANICAL
●		HVAC-1	FIRST FLOOR HVAC PLAN
●		HVAC-2	SECOND FLOOR HVAC PLAN
●		HVAC-3	THIRD FLOOR HVAC PLAN
●		HVAC-4	MEZZANINE HVAC PLAN
◔		HVAC-5	ROOF HVAC PLAN
●		HVAC-6	HVAC SCHEDULE AND NOTES
			PLUMBING
●		P-1	UNDERGROUND PLUMBING
●		P-2	SECOND FLOOR PLUMBING PLAN
●		P-3	THIRD FLOOR PLUMBING PLAN
●		P-4	ROOF PLAN, STORM AND DETAILS
●		P-5	PLUMBING SCHEDULES AND DETAILS
●		P-6	SANITARY RISER DIAGRAMS
●		P-7	WATER RISER DIAGRAMS
			ELECTRICAL
●		E000	ELECTRICAL SYMBOL LIST, ABBREVIATIONS AND DRAWING INDEX
●		E100	ELECTRICAL SITE PLAN
●		E101	FIRST FLOOR POWER PLAN
●		E102	SECOND FLOOR POWER PLAN
●		E103	THIRD FLOOR POWER PLAN
●		E104	ROOF POWER PLAN
●		E201	FIRST FLOOR LIGHTING PLAN
●		E202	SECOND FLOOR LIGHTING PLAN
●		E203	THIRD FLOOR LIGHTING PLAN
●		E301	TYPICAL UNIT ELECTRICAL PLANS
●		E302	TYPICAL UNIT ELECTRICAL PLANS
●		E303	TYPICAL UNIT ELECTRICAL PLANS
●		E401	UNIT LOAD SCHEDULES
●		E501	ONE LINE RISER DIAGRAM AND GROUNDING DETAIL
●		[illegible]01	PANEL SCHEDULES
●		[illegible]01	ELECTRICAL SPECIFICATIONS

○ ISSUED FOR REFERENCE
◐ ISSUED FOR BID
● ISSUED FOR CONSTRUCTION

Location Map

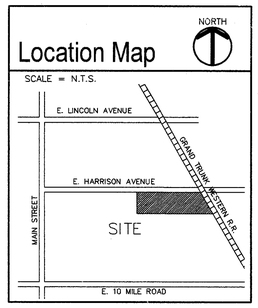

CODE DATA

Building Code:
2003 Michigan Building Code
2003 Michigan Mechanical Code
2003 Michigan Plumbing Code
2003 Michigan Electrical Code
Americans with Disabilities Act

BUILDING DATA:

First Floor:	19,310 gross square feet
Second Floor:	17,241 gross square feet
Third Floor:	13,921 gross square feet
Fourth Floor:	9,249 gross square feet
Total Area:	59,721 gross square feet

Construction Type: 3B

Use Group: Residential R-2

Fire Suppression: Full automatic fire suppression system

Occupant Load Table
Residential 200 gross square feet per person= 299 persons

Stair width required: 299 persons x .2 = 60"

Stair width provided: 2 stairs x 44" = 88"

Other egress component width required: 299 persons x .15" = 45"

Other egress component width provided: 4 doors x 36" doors each (32" clear) = 128"

Exits required at first floor: 2 minimum
Exits provided at first floor: 3

FIRE RESISTANCE RATING REQUIREMENTS

Structural columns supporting roof only:
0 hour

Structural beams supporting roof only:
0 hour

Bearing walls:
0 hours

Floor Construction:
0 hours

Roof Construction:
0 hour

Floors separating dwelling units: 1 hour (per 710.3)

Walls separating dwelling units: 1 hour (per 708.3)

Fireproofing of structural steel:

In order to comply with 710.3, apply spray-on fireproofing to steel beams and metal deck in corridor 302, elevator lobby 303 and structure concealed above soffit at floor of Unit 20 to afford 1 hour protection.

Exposed to view steel in Unit 20 (roof beams and metal deck) shall receive intumescent paint coating to afford 1 hour protection.

Exposed to view steel in Unit 10 (floor beams and metal deck above) shall receive intumescent paint coating to afford 1 hour protection.

Any steel beams, lintels, clips, etc. that support precast plank that is part of a floor system between dwelling units shall receive intumescent paint coating to afford 1 hour protection.

Steel beams, joists and deck and other miscellaneous steel that form the floor system for the fourth floor within dwelling units and the roof system over the fourth floor are not required to be rated and do not require fireproofing.

6/26/04 Per Planning Dept. ok to issue permits for construction of a 30 residential unit building with a maximum height of 52 feet. Development shall be consistent with the approved site plan (SP-03-12-31) and revisions identified in the attached June 22, 2004 letter from Cornerstone Building Group. All construction/development shall comply with ordinance and code requirements.
Mark Stuhlsatz
Deputy Director of Planning

Compliance With 2002 MEC

Provide Available Fault Current Information Per N.E.C 110-9 Prior To Final Inspection

Revisions

STATE OF MICHIGAN — LAWRENCE P. NEUMANN — REGISTERED ARCHITECT

MAY 28, 2004 – ISSUED FOR BIDS

MAY 21, 2004 – ISSUED FOR FOUNDATIONS (FOR REFERENCE ONLY)

MAY 13, 2004 – ISSUED FOR MASONRY PRICING

Date
Drawn
MGD
Checked
MGD
Approved
PTM
Bidpak Number

☐ Preliminary
☒ Construction
☐ Record

Do no. Use figu. dimensio. Copyright ©

Job Number
23091

Title
Title Sheet

322 East Harrison
MetroLofts, LLC
6/25/04

10:08:43 AM, -5, Xerox 5104ps-scanner.ps3, 1:1, Neumann/Smith & Assoc.
Construction Documents\23091A100.dwg
23091 - M

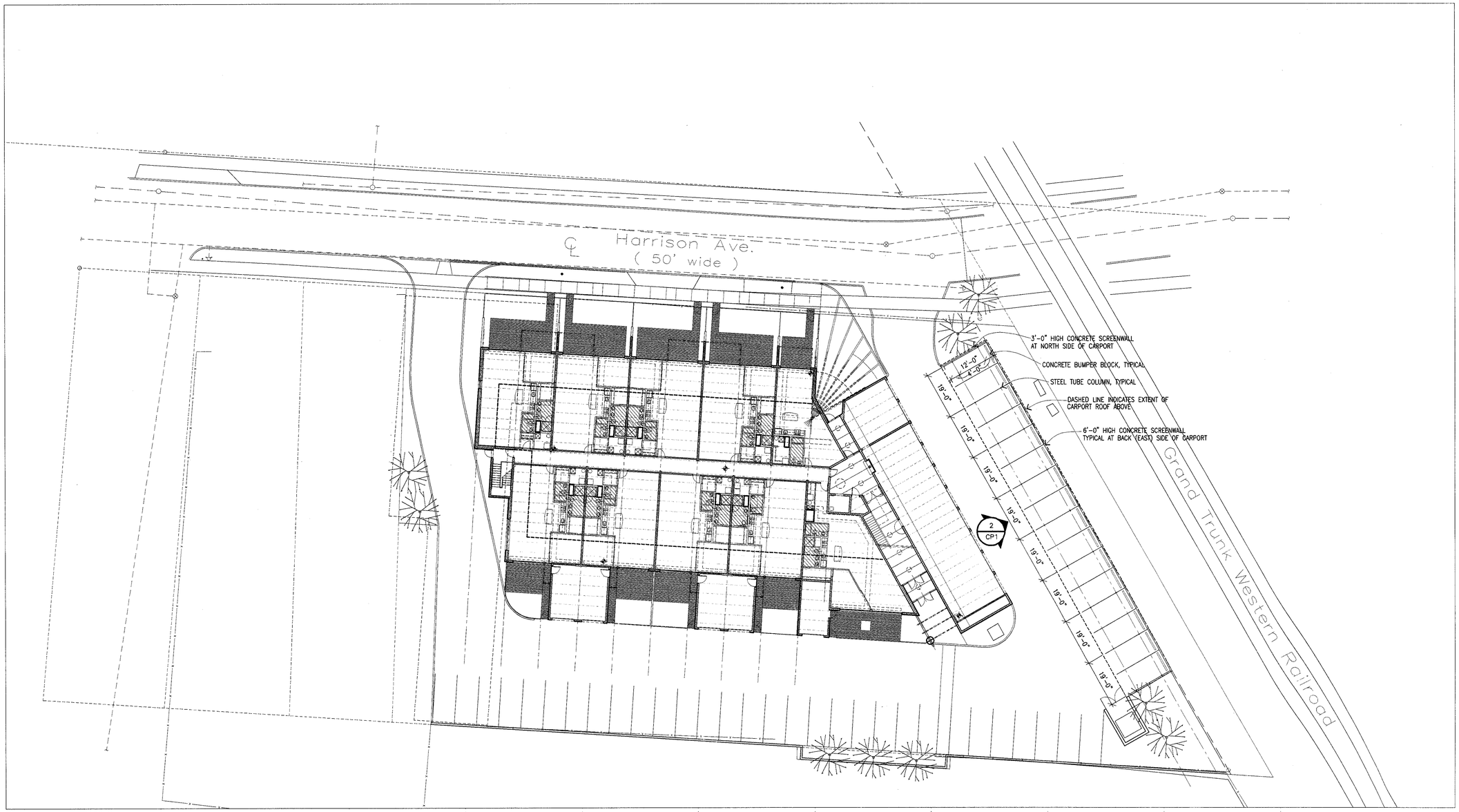

SITE PLAN SHOWING CARPORTS

SCALE: 1"=20'-0"

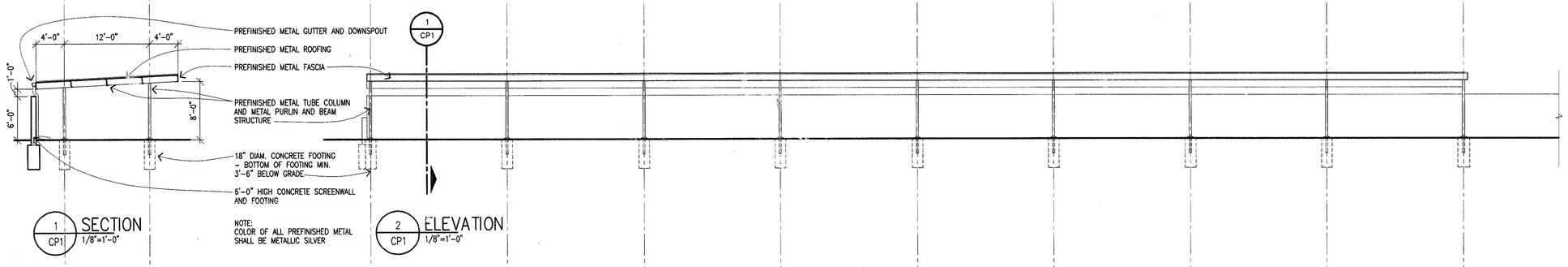

1 CP1 SECTION 1/8"=1'-0"

NOTE:
COLOR OF ALL PREFINISHED METAL SHALL BE METALLIC SILVER

2 CP1 ELEVATION 1/8"=1'-0"

NEUMANN SMITH & ASSOCIATES

Architecture
Planning
Interior Design

400 Galleria Officentre
Suite 555
Southfield, Michigan 48034

248-352-8310
Fax 248-352-1821
NS@neumannsmith.com

Metro Lofts

Royal Oak, Michigan

Revisions

STATE OF MICHIGAN
JOEL LAWRENCE SMITH
ARCHITECT
LICENSED ARCHITECT

Date
6-3-2004

Drawn
ptm

Checked

Approved

Bidpak Number

■ Preliminary
☐ Construction
☐ Record

Do not scale
Use figured dimensions only
Copyright © 2003

Job Number
23091

Title
Carport Plan

Scale: As Noted

Sheet
CP1

F:\2003\23091 - Metro Lofts\30-Construction Documents\23091-Site Plan-carports.dwg, 6/3/2004 11:12:37 AM, pat, Xerox 510dp-scanner.pc3, 1:1, Neumann/Smith & Assoc.

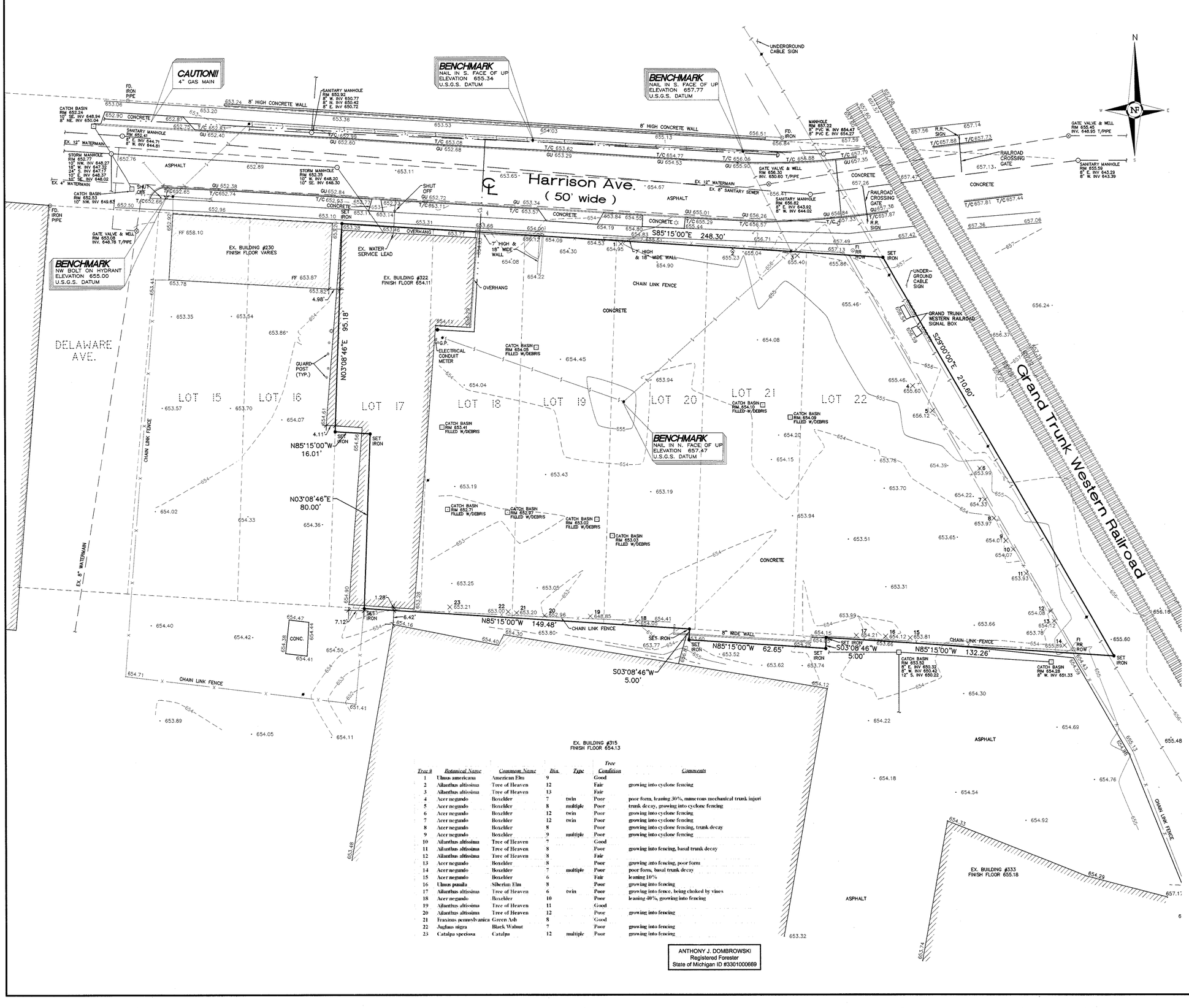

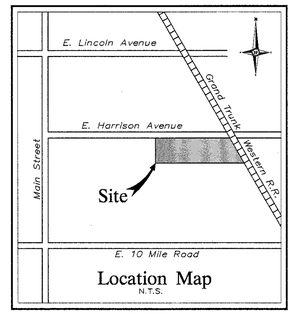

Tree #	Botanical Name	Common Name	Dia.	Type	Tree Condition	Comments
1	Ulmus americana	American Elm	9		Good	
2	Ailanthus altissima	Tree of Heaven	12		Fair	growing into cyclone fencing
3	Ailanthus altissima	Tree of Heaven	13		Fair	
4	Acer negundo	Boxelder	7	twin	Poor	poor form, leaning 30%, numerous mechanical trunk injuri
5	Acer negundo	Boxelder	8	multiple	Poor	trunk decay, growing into cyclone fencing
6	Acer negundo	Boxelder	12	twin	Poor	growing into cyclone fencing
7	Acer negundo	Boxelder	12	twin	Poor	growing into cyclone fencing
8	Acer negundo	Boxelder	8		Poor	growing into cyclone fencing, trunk decay
9	Acer negundo	Boxelder	9	multiple	Poor	growing into cyclone fencing
10	Ailanthus altissima	Tree of Heaven	7		Good	
11	Ailanthus altissima	Tree of Heaven	8		Poor	growing into fencing, basal trunk decay
12	Ailanthus altissima	Tree of Heaven	8		Fair	
13	Acer negundo	Boxelder	8		Poor	growing into fencing, poor form
14	Acer negundo	Boxelder	7	multiple	Poor	poor form, basal trunk decay
15	Acer negundo	Boxelder	6		Fair	leaning 10%
16	Ulmus pumila	Siberian Elm	8		Poor	growing into fencing
17	Ailanthus altissima	Tree of Heaven	6	twin	Poor	growing into fence, being choked by vines
18	Acer negundo	Boxelder	10		Poor	leaning 40%, growing into fencing
19	Ailanthus altissima	Tree of Heaven	11		Good	
20	Ailanthus altissima	Tree of Heaven	12		Poor	growing into fencing
21	Fraxinus pennsylvanica	Green Ash	8		Good	
22	Juglans nigra	Black Walnut	7		Poor	growing into fencing
23	Catalpa speciosa	Catalpa	12	multiple	Poor	growing into fencing

ANTHONY J. DOMBROWSKI
Registered Forester
State of Michigan ID #3301000669

UTILITY NOTE

SURVEYOR UNABLE TO DETERMINE EXISTING ON-SITE STORM SEWER CONFIGURATION DUE TO DEBRIS IN STRUCTURES & SEMI TRAILERS PARKED ON THE SITE. OWNER/CONTRACTOR TO CLEAN EXISTING STRUCTURES FOR FURTHER INVESTIGATION BY SURVEYOR.

CERTIFICATE OF SURVEY

WE HEREBY CERTIFY THAT WE HAVE SURVEYED THE PROPERTY HEREIN DESCRIBED AND THAT WE HAVE PLACED MARKER IRONS AT THE CORNERS OF THE PARCEL OR AS INDICATED IN THE ABOVE SKETCH.

ALEX NICOLAESCU, PS DATE: 09-22-03
NO. 22705

LEGAL DESCRIPTION

PART OF THE S.W. 1/4 OF SECTION 22, T.1N., R.11E., CITY OF ROYAL OAK, OAKLAND COUNTY, MICHIGAN, DESCRIBED AS: LOT 17, EXCEPT THE SOUTH 80.00 FEET OF THE WEST 16.00 FEET, AND ALL OF LOTS 18 THROUGH 22, INCLUSIVE, "ERBENDALE PARK ADDITION", AS RECORDED IN LIBER 11, PAGE 8 OF PLATS, OAKLAND COUNTY RECORDS. ALSO, PART OF LOT 1 OF "ASSESSOR'S PLAT NO. 27", AS RECORDED IN LIBER 54, PAGE 22 OF PLATS, OAKLAND COUNTY RECORDS. ALL BEING MORE PARTICULARLY DESCRIBED AS BEGINNING AT THE NORTHWEST CORNER OF SAID LOT 17 THENCE ALONG THE SOUTH RIGHT-OF-WAY LINE OF HARRISON AVENUE (50' WIDE-PUBLIC) ALSO BEING THE NORTH LINE OF SAID "ERBENDALE PARK ADDITION" S85°15'00"E, 248.30 FEET TO THE NORTHEAST CORNER OF SAID LOT 22, THENCE ALONG THE EAST LINE OF SAID LOT 22 ALSO BEING THE WESTERLY RIGHT-OF-WAY LINE OF GRAND TRUNK WESTERN RAILROAD (83' WIDE) AS PLATTED S.29°00'00"E, 210.60 FEET TO THE SOUTHEAST CORNER OF SAID LOT 22, THENCE ALONG THE SOUTH LINE OF SAID "ERBENDALE PARK ADDITION" ALSO BEING THE NORTH LINE OF SAID "ASSESSOR'S PLAT NO. 27" N85°15'00"W, 132.26 FEET, THENCE S03°08'46"W, 5.00 FEET, THENCE N85°15'00"W, 62.65 FEET, THENCE N03°08'46"E, 5.00 FEET TO A POINT ON THE SOUTH LINE OF SAID "ERBENDALE PARK ADDITION" ALSO BEING THE NORTH LINE OF SAID "ASSESSOR'S PLAT NO. 27", THENCE ALONG SAID LINE N85°15'00"W, 149.48 FEET, THENCE N03°08'46"E, 80.00 FEET, THENCE N85°15'00"W, 16.01 FEET TO A POINT ON THE WEST LINE OF SAID LOT 17, THENCE ALONG SAID WEST LINE N03°08'46"E, 95.18 FEET TO THE POINT OF BEGINNING.

SITE CONTAINING 52,327 SQUARE FEET OR 1.20 ACRES.

BOUNDARY NOTE

ALL BEARINGS ARE IN RELATIONSHIP TO THE PREVIOUSLY ESTABLISHED NORTH LINE OF HARRISON AVE. OF THE ERBENDALE PARK ADDITION TO THE VILLAGE OF ROYAL OAK, OAKLAND COUNTY, MICHIGAN AS RECORDED IN LIBER 11, PAGE 8, OAKLAND COUNTY RECORDS.

THIS SURVEY WAS COMPLETED WITHOUT THE BENEFIT OF A TITLE POLICY, THEREFORE ALL EASEMENTS OF RECORD AND OTHER FACTORS RELEVANT TO TITLE MAY NOT BE SHOWN.

TOPOGRAPHIC SURVEY NOTES

ALL ELEVATIONS ARE EXISTING ELEVATIONS.

UTILITY LOCATIONS WERE OBTAINED FROM MUNICIPAL OFFICIALS AND RECORDS OF UTILITY COMPANIES, AND NO GUARANTEE CAN BE MADE TO THE COMPLETENESS, OR EXACTNESS OF LOCATION.

SHEET INDEX

C1	Boundary/Topographic Survey
C2	Demolition Plan
C3	Paving & Grading Plan
C4	Utility Plan
C5	Storm Sewer Profile Plan
C6	Soil Erosion/Drainage Area Plan
C7	Engineering Site Plan (For Reference Only)
C8	City Of Royal Oak Standard Storm Details
C9	City Of Royal Oak Standard Sewer Details
C10	City Of Royal Oak Standard Sewer Details
C11	City Of Royal Oak Standard Sewer Details

LEGEND

- MANHOLE — EXISTING SANITARY SEWER
- HYDRANT, GATE VALVE — EXISTING SAN. CLEAN OUT
- MANHOLE, CATCH BASIN — EXISTING WATER MAIN
- EXISTING STORM SEWER
- EX. R.Y. CATCH BASIN
- EXISTING BURIED CABLES
- UTILITY POLE, GUY POLE, GUY WIRE — OVERHEAD LINES
- LIGHT POLE
- SIGN
- EXISTING GAS MAIN

NOWAK & FRAUS

Consulting Engineers
Land Surveyors
Land Planners

1310 N. Stephenson Highway
Royal Oak, MI 48067-1508
Tel. (248) 399-0886
Fax. (248) 399-0805

SEAL

STATE OF MICHIGAN — ALEXANDER NICOLAESCU — PROFESSIONAL SURVEYOR NO. 22705 — LICENSED PROFESSIONAL SURVEYOR

PROJECT
Metropolitan Lofts

CLIENT
Neumann Smith & Associates
400 Galleria Officentre
Suite 555
Southfield, MI 48034
Contact: Gene Carroll
(248) 352-8310 - Phone
(248) 352-1821 - Fax

PROJECT LOCATION
Part of the SW 1/4 of Section 22
T. 1 North, R. 11 East
City of Royal Oak, Oakland County, Michigan

SHEET
Boundary/Topographic/ Tree Survey

72 HOURS (3 WORKING DAYS) BEFORE YOU DIG CALL MISS DIG 1-800-482-7171 (TOLL FREE)

DATE/ REVISION
04-29-04 ISSUED FOR CITY REVIEW
06-01-04 REVISED PER CITY REVIEW
06-08-04 REVISED PER CITY REVIEW

DRAWN BY: M. Carnaghi
DESIGNED BY:
APPROVED BY: A. Nicolaescu
DATE: 09-22-03
SCALE: 1"=20'

N/F JOB NO. 3-D040
SHEET NO. C1

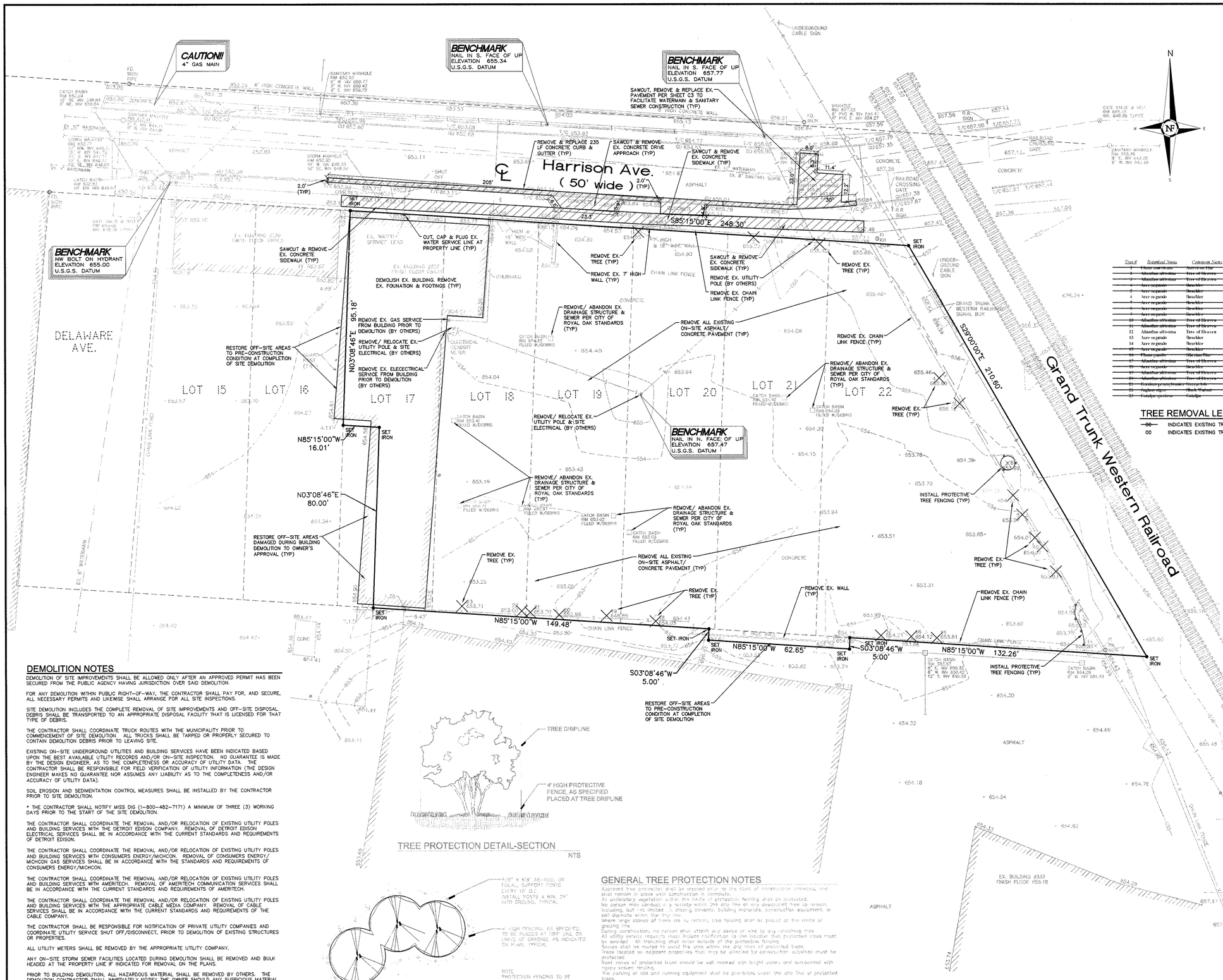

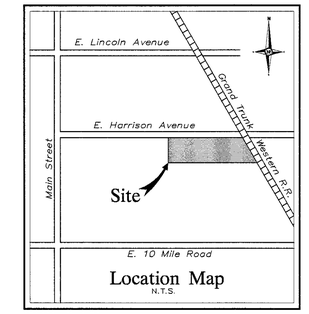

Tree #	Botanical Name	Common Name	Dia.	Type	Tree Condition	Comments
1	Ulmus americana	American Elm	7		Good	
2	Ailanthus altissima	Tree of Heaven	15		Fair	growing into cyclone fencing
3	Ailanthus altissima	Tree of Heaven	15		Fair	
4	Acer negundo	Boxelder	5	twin	Poor	poor form, leaning 30%, exhibits mechanical trunk injury
5	Acer negundo	Boxelder	6	multiple	Poor	trunk decay, growing into cyclone fencing
6	Acer negundo	Boxelder	12	twin	Poor	growing into cyclone fencing
7	Acer negundo	Boxelder	12	twin	Poor	growing into cyclone fencing
8	Acer negundo	Boxelder	6		Poor	growing into cyclone fencing, trunk decay
9	Acer negundo	Boxelder	8	multiple	Poor	growing into cyclone fencing
10	Ailanthus altissima	Tree of Heaven	7		Good	
11	Ailanthus altissima	Tree of Heaven	9		Poor	growing into fencing, basal trunk decay
12	Ailanthus altissima	Tree of Heaven	8		Poor	growing into fencing, poor form
13	Acer negundo	Boxelder	8		Poor	growing into fencing, poor form
14	Acer negundo	Boxelder	7	multiple	Poor	poor form, basal trunk decay
15	Acer negundo	Boxelder	6		Fair	leaning 30%
16	Thuja occidentalis	American Elm	8		Poor	growing into fencing
17	Ailanthus altissima	Tree of Heaven	6	twin	Poor	growing into fence, being choked by vines
18	Acer negundo	Boxelder	10		Poor	leaning 40% growing into fencing
19	Ailanthus altissima	Tree of Heaven	11		Good	
20	Ailanthus altissima	Tree of Heaven	15		Poor	growing into fencing
21	Fraxinus pennsylvanica	Green Ash	6		Good	
22	Juglans nigra	Black Walnut	7		Poor	growing into fencing
23	Catalpa speciosa	Catalpa	10	multiple	Poor	growing into fencing

TREE REMOVAL LEGEND

-00- INDICATES EXISTING TREE TO BE REMOVED
00 INDICATES EXISTING TREE TO REMAIN

ANTHONY J. DOMBROWSKI
Registered Forester
State of Michigan ID #3301000669

DEMOLITION NOTES

DEMOLITION OF SITE IMPROVEMENTS SHALL BE ALLOWED ONLY AFTER AN APPROVED PERMIT HAS BEEN SECURED FROM THE PUBLIC AGENCY HAVING JURISDICTION OVER SAID DEMOLITION.

FOR ANY DEMOLITION WITHIN PUBLIC RIGHT-OF-WAY, THE CONTRACTOR SHALL PAY FOR, AND SECURE, ALL NECESSARY PERMITS AND LIKEWISE SHALL ARRANGE FOR ALL SITE INSPECTIONS.

SITE DEMOLITION INCLUDES THE COMPLETE REMOVAL OF SITE IMPROVEMENTS AND OFF-SITE DISPOSAL. DEBRIS SHALL BE TRANSPORTED TO AN APPROPRIATE DISPOSAL FACILITY THAT IS LICENSED FOR THAT TYPE OF DEBRIS.

THE CONTRACTOR SHALL COORDINATE TRUCK ROUTES WITH THE MUNICIPALITY PRIOR TO COMMENCEMENT OF SITE DEMOLITION. ALL TRUCKS SHALL BE TARPED OR PROPERLY SECURED TO CONTAIN DEMOLITION DEBRIS PRIOR TO LEAVING SITE.

EXISTING ON-SITE UNDERGROUND UTILITIES AND BUILDING SERVICES HAVE BEEN INDICATED BASED UPON THE BEST AVAILABLE UTILITY RECORDS AND/OR ON-SITE INSPECTION. NO GUARANTEE IS MADE BY THE DESIGN ENGINEER, AS TO THE COMPLETENESS OR ACCURACY OF UTILITY DATA. THE CONTRACTOR SHALL BE RESPONSIBLE FOR FIELD VERIFICATION OF UTILITY INFORMATION (THE DESIGN ENGINEER MAKES NO GUARANTEE NOR ASSUMES ANY LIABILITY AS TO THE COMPLETENESS AND/OR ACCURACY OF UTILITY DATA).

SOIL EROSION AND SEDIMENTATION CONTROL MEASURES SHALL BE INSTALLED BY THE CONTRACTOR PRIOR TO SITE DEMOLITION.

* THE CONTRACTOR SHALL NOTIFY MISS DIG (1-800-482-7171) A MINIMUM OF THREE (3) WORKING DAYS PRIOR TO THE START OF THE SITE DEMOLITION.

THE CONTRACTOR SHALL COORDINATE THE REMOVAL AND/OR RELOCATION OF EXISTING UTILITY POLES AND BUILDING SERVICES WITH THE DETROIT EDISON COMPANY. REMOVAL OF DETROIT EDISON ELECTRICAL SERVICES SHALL BE IN ACCORDANCE WITH THE CURRENT STANDARDS AND REQUIREMENTS OF DETROIT EDISON.

THE CONTRACTOR SHALL COORDINATE THE REMOVAL AND/OR RELOCATION OF EXISTING UTILITY POLES AND BUILDING SERVICES WITH CONSUMERS ENERGY/MICHCON. REMOVAL OF CONSUMERS ENERGY/ MICHCON GAS SERVICES SHALL BE IN ACCORDANCE WITH THE STANDARDS AND REQUIREMENTS OF CONSUMERS ENERGY/MICHCON.

THE CONTRACTOR SHALL COORDINATE THE REMOVAL AND/OR RELOCATION OF EXISTING UTILITY POLES AND BUILDING SERVICES WITH AMERITECH. REMOVAL OF AMERITECH COMMUNICATION SERVICES SHALL BE IN ACCORDANCE WITH THE CURRENT STANDARDS AND REQUIREMENTS OF AMERITECH.

THE CONTRACTOR SHALL COORDINATE THE REMOVAL AND/OR RELOCATION OF EXISTING UTILITY POLES AND BUILDING SERVICES WITH THE APPROPRIATE CABLE MEDIA COMPANY. REMOVAL OF CABLE SERVICES SHALL BE IN ACCORDANCE WITH THE CURRENT STANDARDS AND REQUIREMENTS OF THE CABLE COMPANY.

THE CONTRACTOR SHALL BE RESPONSIBLE FOR NOTIFICATION OF PRIVATE UTILITY COMPANIES AND COORDINATE UTILITY SERVICE SHUT OFF/DISCONNECT, PRIOR TO DEMOLITION OF EXISTING STRUCTURES OR PROPERTIES.

ALL UTILITY METERS SHALL BE REMOVED BY THE APPROPRIATE UTILITY COMPANY.

ANY ON-SITE STORM SEWER FACILITIES LOCATED DURING DEMOLITION SHALL BE REMOVED AND BULK HEADED AT THE PROPERTY LINE IF INDICATED FOR REMOVAL ON THE PLANS.

PRIOR TO BUILDING DEMOLITION, ALL HAZARDOUS MATERIAL SHALL BE REMOVED BY OTHERS. THE DEMOLITION CONTRACTOR SHALL IMMEDIATELY NOTIFY THE OWNER SHOULD ANY SUSPICIOUS MATERIAL BE FOUND.

WATER SERVICES AND/OR STOP-BOX SHALL BE PRESERVED AND BULK HEADED AT THE PROPERTY LINE OR AS DIRECTED BY THE OWNER'S REPRESENTATION.

WHERE EXISTING BUILDINGS PLANED FOR DEMOLITION FALL WITHIN PROPOSED BUILDING FOOT PRINTS, BASEMENT FLOOR SLABS, FOUNDATION WALLS AND FOOTINGS SHALL BE COMPLETELY REMOVED AND BACK FILLED WITH MDOT CLASS II GRANULAR MATERIAL AND BE MACHINE COMPACTED TO A MINIMUM OF 98% OF MATERIALS MAXIMUM DENSITY.

TREE PROTECTION DETAIL-SECTION
NTS

TREE PROTECTION DETAIL-PLAN
NTS

GENERAL TREE PROTECTION NOTES

Approved tree protection shall be erected prior to the start of construction (alteration, and shall remain in place until construction is complete.
All understory vegetation within the limits of protection fencing shall be protected.
No person may conduct any activity within the drip line of any designated tree to remain, including, but not limited to, placing solvents, building materials, construction equipment, or soil deposits within the drip line.
Where large stands of trees are to remain, tree fencing shall be placed at the limits of grading line.
During construction, no person shall attach any device or wire to any remaining tree.
All utility service requests shall include notification to the installer that protected trees must be avoided. All trenching shall occur outside of the protective fencing.
Excess shall be routed to avoid the area within the drip lines of protected trees.
Trees located on adjacent properties that may be affected by construction activities must be protected.
Root zones of protected trees should be well marked with bright colors and surrounded with rigidly staked fencing.
The parking of idle and running equipment shall be prohibited under the drip line of protected trees.
The stripping of topsoil from around protected trees shall be prohibited.
Trees to be removed shall be fell away from trees to be saved.
Grubbing of understory vegetation in construction areas should be cleared by cutting vegetation at ground level with a chain saw or swinging with a brush-axe.
The Landscape Architect shall be notified immediately if any protected tree is damaged or removed.
Trees to be removed shall be field verified, evaluated and tagged for removal by the Landscape Architect or Forester, only at the request of the Owner.

LEGAL DESCRIPTION

PART OF THE S.W. 1/4 OF SECTION 22, T.1N., R.11E., CITY OF ROYAL OAK, OAKLAND COUNTY, MICHIGAN, DESCRIBED AS: LOT 17, EXCEPT THE SOUTH 80.00 FEET OF THE WEST 16.00 FEET, AND ALL OF LOTS 18 THROUGH 22, INCLUSIVE, "ERBENDALE PARK ADDITION", AS RECORDED IN LIBER 11, PAGE 8 OF PLATS, OAKLAND COUNTY RECORDS. ALSO, PART OF LOT 1 OF "ASSESSOR'S PLAT NO. 27", AS RECORDED IN LIBER 54, PAGE 22 OF PLATS, OAKLAND COUNTY RECORDS. ALL BEING MORE PARTICULARLY DESCRIBED AS BEGINNING AT THE NORTHWEST CORNER OF SAID LOT 17 THENCE ALONG THE SOUTH RIGHT-OF-WAY LINE OF HARRISON AVENUE (50' WIDE-PUBLIC) ALSO BEING THE NORTH LINE OF SAID "ERBENDALE PARK ADDITION" S85°15'00"E, 248.30 FEET TO THE NORTHEAST CORNER OF SAID LOT 22, THENCE ALONG THE EAST LINE OF SAID LOT 22 ALSO BEING THE WESTERLY RIGHT-OF-WAY LINE OF GRAND TRUNK WESTERN RAILROAD (83' WIDE) AS PLATTED S.29°00'00"E, 210.60 FEET TO THE SOUTHEAST CORNER OF SAID LOT 22, THENCE ALONG THE SOUTH LINE OF SAID "ERBENDALE PARK ADDITION" ALSO BEING THE NORTH LINE OF SAID "ASSESSOR'S PLAT NO. 27" N85°15'00"W, 132.26 FEET, THENCE S03°08'46"W, 5.00 FEET, THENCE N85°15'00"W, 62.65 FEET, THENCE N03°08'46"E, 5.00 FEET TO A POINT ON THE SOUTH LINE OF SAID "ERBENDALE PARK ADDITION" ALSO BEING THE NORTH LINE OF SAID "ASSESSOR'S PLAT NO. 27", THENCE ALONG SAID LINE N85°15'00"W, 149.48 FEET, THENCE N03°08'46"E, 80.00 FEET, THENCE N85°15'00"W, 16.01 FEET TO A POINT ON THE WEST LINE OF SAID LOT 17, THENCE ALONG SAID WEST LINE N03°08'46"E, 95.18 FEET TO THE POINT OF BEGINNING.

SITE CONTAINING 52,327 SQUARE FEET OR 1.20 ACRES.

UTILITY NOTE

SURVEYOR UNABLE TO DETERMINE EXISTING ON-SITE STORM SEWER CONFIGURATION DUE TO DEBRIS IN STRUCTURES & SEMI TRAILERS PARKED ON THE SITE. OWNER/CONTRACTOR TO CLEAN EXISTING STRUCTURES FOR FURTHER INVESTIGATION BY SURVEYOR.

NOTE

ALL EXISTING UTILITY LINES THAT INTERFERE WITH BUILDING FOUNDATION/ FOOTING SHALL BE REMOVED (V.I.F.)

TOPOGRAPHIC SURVEY NOTES

ALL ELEVATIONS ARE EXISTING ELEVATIONS.

UTILITY LOCATIONS WERE OBTAINED FROM MUNICIPAL OFFICIALS AND RECORDS OF UTILITY COMPANIES, AND NO GUARANTEE CAN BE MADE TO THE COMPLETENESS, OR EXACTNESS OF LOCATION.

LEGEND

- MANHOLE — EXISTING SANITARY SEWER
- HYDRANT, GATE VALVE — EXISTING SAN. CLEAN OUT
- MANHOLE, CATCH BASIN — EXISTING WATER MAIN
- EXISTING STORM SEWER
- EX. R. Y. CATCH BASIN
- UTILITY POLE, GUY POLE, GUY WIRE — EXISTING BURIED CABLES
- OVERHEAD LINES
- LIGHT POLE
- SIGN
- EXISTING GAS MAIN
- 12" MAPLE — INDICATES EXISTING TREE TO BE REMOVED
- INDICATES AREAS OF PAVEMENT, BUILDINGS, ETC. TO BE REMOVED

NOWAK & FRAUS
Consulting Engineers
Land Surveyors
Land Planners
1310 N. Stephenson Highway
Royal Oak, MI 48067-1508
Tel. (248) 399-0886
Fax. (248) 399-0805

SEAL

STATE OF MICHIGAN
ALEXANDER NICOLAESCU
PROFESSIONAL SURVEYOR
NO. 22705
LICENSED PROFESSIONAL SURVEYOR

PROJECT
Metropolitan Lofts

CLIENT
Neumann Smith & Associates
400 Galleria Officentre
Suite 555
Southfield, MI 48034
Contact: Gene Carroll
(248) 352-8310 - Phone
(248) 352-1821 - Fax

PROJECT LOCATION
Part of the SW 1/4 of Section 22
T. 1 North, R. 11 East
City of Royal Oak, Oakland County, Michigan

SHEET
Demolition Plan

72 HOURS (3 WORKING DAYS) BEFORE YOU DIG CALL MISS DIG 1-800-482-7171 (TOLL FREE)

DATE/ REVISION
04-29-04 ISSUED FOR CITY REVIEW
06-01-04 REVISED PER CITY REVIEW
06-08-04 REVISED PER CITY REVIEW

DRAWN BY: R. Johnson
DESIGNED BY: R. Johnson
APPROVED BY: T. Germain
DATE: 09-22-03
SCALE: 1"=20'

N/F JOB NO. 3-D040
SHEET NO. C2

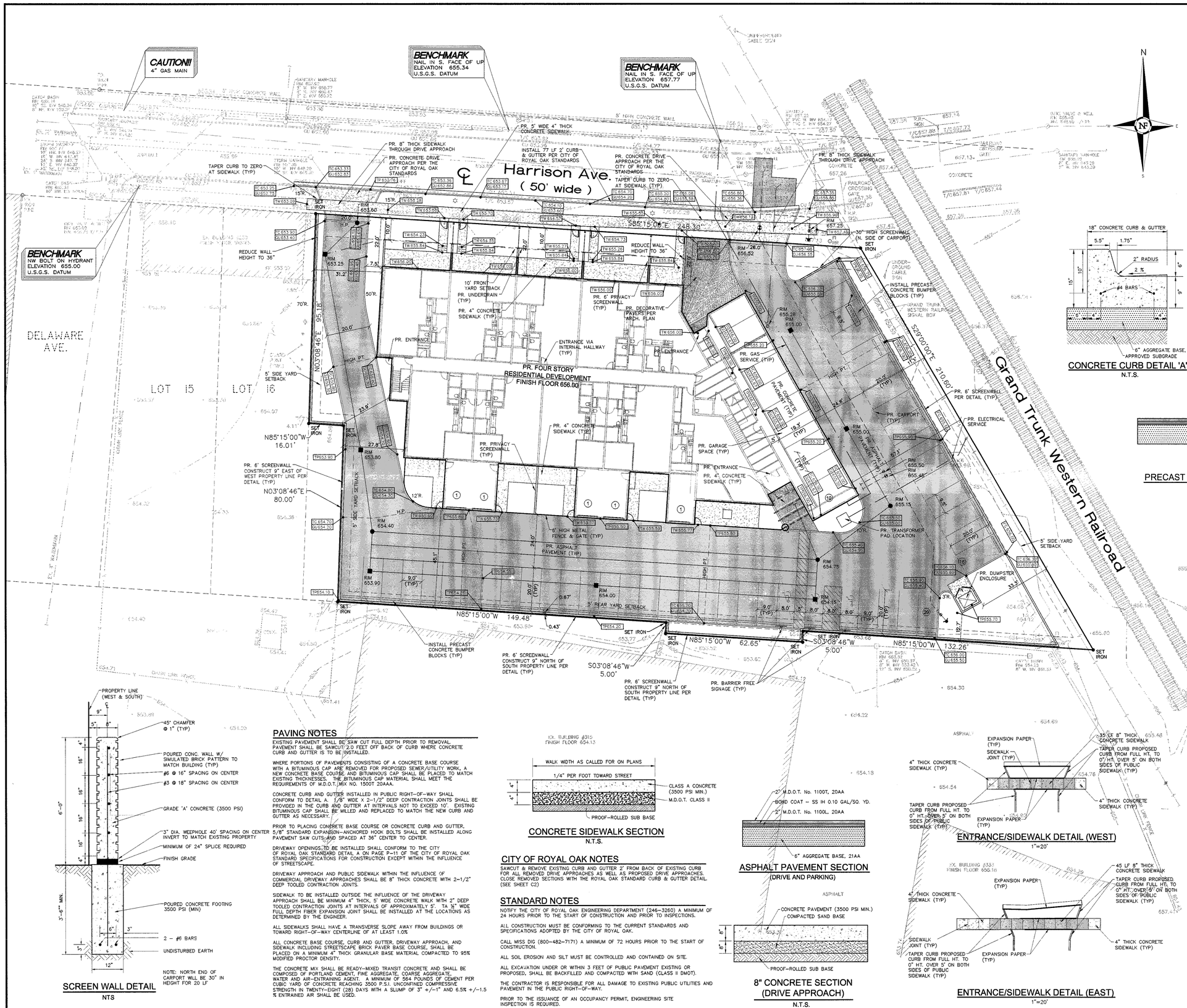
CAUTION!! 4" GAS MAIN
BENCHMARK NAIL IN S. FACE OF UP ELEVATION 655.34 U.S.G.S. DATUM
BENCHMARK NAIL IN S. FACE OF UP ELEVATION 657.77 U.S.G.S. DATUM
BENCHMARK NW BOLT ON HYDRANT ELEVATION 655.00 U.S.G.S. DATUM
Harrison Ave. (50' wide)
DELAWARE AVE.
LOT 15
LOT 16
PR. FOUR STORY RESIDENTIAL DEVELOPMENT FINISH FLOOR 656.00
Grand Trunk Western Railroad
PR. 8" THICK SIDEWALK THROUGH DRIVE APPROACH
PR. CONCRETE DRIVE APPROACH PER THE CITY OF ROYAL OAK STANDARDS
TAPER CURB TO ZERO AT SIDEWALK (TYP)
PR. 5' WIDE 4" THICK CONCRETE SIDEWALK
INSTALL 77 LF 2' CURB & GUTTER PER CITY OF ROYAL OAK STANDARDS
PR. 8' THICK SIDEWALK THROUGH DRIVE APPROACH
REDUCE WALL HEIGHT TO 36"
10' FRONT YARD SETBACK
PR. UNDERDRAIN (TYP)
PR. 4" CONCRETE SIDEWALK (TYP)
PR. 6' PRIVACY SCREENWALL (TYP)
PR. DECORATIVE PAVERS PER ARCH. PLAN
PR. ENTRANCE
ENTRANCE VIA INTERNAL HALLWAY (TYP)
PR. GAS SERVICE (TYP)
PR. CONCRETE PAVEMENT (TYP)
PR. CARPORT (TYP)
PR. ELECTRICAL SERVICE
PR. 6' SCREENWALL PER DETAIL (TYP)
INSTALL PRECAST CONCRETE BUMPER BLOCKS (TYP)
GRAND TRUNK WESTERN RAILROAD SIGNAL BOX
UNDER-GROUND CABLE SIGN
30" HIGH SCREENWALL (N. SIDE OF CARPORT) SET IRON
PR. GARAGE SPACE (TYP)
PR. 4' CONCRETE SIDEWALK (TYP)
PR. TRANSFORMER PAD LOCATION
PR. DUMPSTER ENCLOSURE
PR. 6' SCREENWALL CONSTRUCT 9" EAST OF WEST PROPERTY LINE PER DETAIL (TYP)
6' HIGH METAL FENCE & GATE (TYP)
PR. ASPHALT PAVEMENT (TYP)
PR. 6' SCREENWALL CONSTRUCT 9" NORTH OF SOUTH PROPERTY LINE PER DETAIL (TYP)
PR. BARRIER FREE SIGNAGE (TYP)
INSTALL PRECAST CONCRETE BUMPER BLOCKS (TYP)
PR. 6' SCREENWALL CONSTRUCT 9" NORTH OF SOUTH PROPERTY LINE PER DETAIL (TYP)
EX. 8" WATERMAIN
EX. 8" SANITARY SEWER
EX. 12" STORM SEWER
EX. 4" GAS MAIN
EX. 3" WATERMAIN
EX. 6" WATERMAIN
EX. 10" WATERMAIN
EX. 12" WATERMAIN
S85°15'00"E 248.30'
N03°08'46"E 95.18'
N85°15'00"W 16.01'
N03°08'46"E 80.00'
N85°15'00"W 149.48'
S03°08'46"W 5.00'
N85°15'00"W 62.65'
S03°08'46"W 5.00'
N85°15'00"W 132.26'
S29°00'00"E 210.60'
SET IRON
RIM 653.60
RIM 653.25
RIM 653.80
RIM 653.90
RIM 654.40
RIM 654.00
RIM 654.75
RIM 655.28 PIR 655.00
RIM 655.15
RIM 655.50 RIM 655.45
RIM 656.52
RIM 657.25
RIM 657.48
RIM 654.53 PIR 654.23
RIM 656.36 PIR 656.06
RIM 656.30 PIR 656.00
RIM 656.10 PIR 655.80
RIM 655.90 PIR 655.60
RIM 655.70 PIR 655.40
RIM 655.40 PIR 655.10
RIM 655.30 PIR 655.00
RIM 655.20 PIR 654.90
RIM 655.10 PIR 654.80
RIM 655.00 PIR 654.70
RIM 654.90 PIR 654.60
RIM 654.80 PIR 654.50
RIM 654.70 PIR 654.40
RIM 654.60 PIR 654.30
RIM 654.50 PIR 654.20
RIM

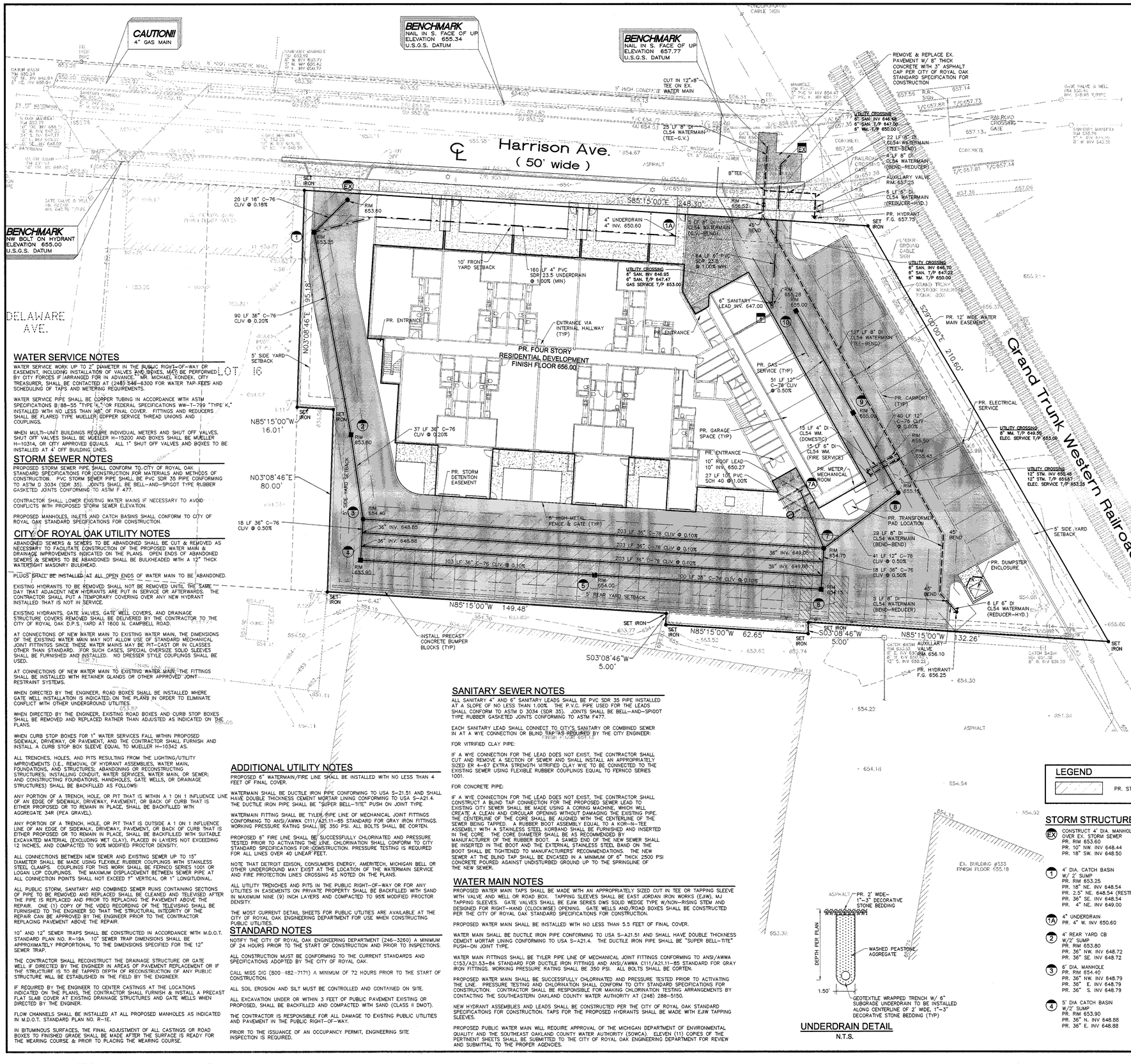
CAUTION!!
4" GAS MAIN
BENCHMARK
NAIL IN S. FACE OF UP
ELEVATION 655.34
U.S.G.S. DATUM
BENCHMARK
NAIL IN S. FACE OF UP
ELEVATION 657.77
U.S.G.S. DATUM
BENCHMARK
NW BOLT ON HYDRANT
ELEVATION 655.00
U.S.G.S. DATUM
Harrison Ave.
(50' wide)
DELAWARE AVE.
Grand Trunk Western Railroad
REMOVE & REPLACE EX. PAVEMENT W/ 8" THICK CONCRETE WITH 3" ASPHALT CAP PER CITY OF ROYAL OAK STANDARD SPECIFICATION FOR CONSTRUCTION
CUT IN 12"x8" TEE ON EX. 8" HIGH CONCRETE WATER MAIN
75 LF 8" DI CL54 WATERMAIN (TEE-G.V.)
UTILITY CROSSING
6" SAN. INV 646.48
6" SAN. T/P 647.00
6" WM. T/P 650.00
22 LF 8" DI CL54 WATERMAIN (TEE-BEND)
4 LF 8" DI CL54 WATERMAIN (BEND-REDUCER)
AUXILLARY VALVE RIM 657.25
8 LF 6" DI CL54 WATERMAIN (REDUCER-HYD.)
PR. HYDRANT F.G. 657.75
SET IRON
S85°15'00"E 248.30'
8"TEE
AS BEND
20 LF 18" C-76 CLIV @ 0.18%
90 LF 36" C-76 CLIV @ 0.20%
37 LF 36" C-76 CLIV @ 0.20%
18 LF 36" C-76 CLIV @ 0.50%
103 LF 36" C-76 CLIV @ 0.10%
203 LF 36" C-76 CLIV @ 0.10%
100 LF 36" C-76 CLIV @ 0.10%
4" UNDERDRAIN 4" INV. 650.60
160 LF 4" PVC SDR 23.5 UNDERDRAIN @ 1.00% (MIN)
64 LF 8" PVC SDR 23.5 @ 1.00% MIN
UTILITY CROSSING
6" SAN. INV 646.95
6" SAN. T/P 647.47
GAS SERVICE T/P 653.00
6" SANITARY LEAD INV. 647.00
10' FRONT YARD SETBACK
PR. ENTRANCE
ENTRANCE VIA INTERNAL HALLWAY (TYP)
PR. FOUR STORY RESIDENTIAL DEVELOPMENT
FINISH FLOOR 656.00
5' SIDE YARD SETBACK
LOT 16
N03°08'46"E 95.18'
N85°15'00"W 16.01'
N03°08'46"E 80.00'
N85°15'00"W 149.48'
N85°15'00"W 62.65'
S03°08'46"W 5.00'
S03°08'46"W 5.00'
S29°00'00"E 210.60'
PR. 12' WIDE WATER MAIN EASEMENT
PR. GAS SERVICE (TYP)
51 LF 12" C-76 CLIV @ 0.50%
PR. GARAGE SPACE (TYP)
PR. STORM DETENTION EASEMENT
PR. ENTRANCE
10" ROOF LEAD
10' INV. 650.27
27 LF 10" PVC-SCH 40 @1.00%
15 LF 4" DI CL54 WM. (DOMESTIC)
15-LF 6" DI CL54 WM. (FIRE SERVICE)
PR. METER/ MECHANICAL ROOM
137 LF 8" DI CL54 WATERMAIN (TEE-BEND)
PR. CARPORT (TYP)
40 LF 12" C-76 CLIV @ 0.60%
PR. ELECTRICAL SERVICE
UTILITY CROSSING
8" WM. T/P 649.95
ELEC. SERVICE T/P 653.00
UTILITY CROSSING
12" STM. T/P 651.67
ELEC. SERVICE T/P 653.25
5' SIDE YARD SETBACK
6' HIGH METAL FENCE & GATE (TYP)
PR. TRANSFORMER PAD LOCATION
29 LF 8" DI CL54 WATERMAIN (BEND-BEND)
41 LF 12" C-76 CLIV @ 0.50%
18 LF 36" C-76 CLIV @ 0.50%
45° BEND
5 LF 8" DI CL54 WATERMAIN (BEND-REDUCER)
6 LF 6" DI CL54 WATERMAIN (REDUCER-HYD.)
PR. DUMPSTER ENCLOSURE
5' REAR YARD SETBACK
INSTALL PRECAST CONCRETE BUMPER BLOCKS (TYP)
SET IRON
RIM 653.60
RIM 653.25
RIM 653.80
RIM 654.40
RIM 653.90
RIM 654.00
RIM 654.75
RIM 654.15
RIM 656.28
RIM 655.00
RIM 655.00
RIM 656.50
RIM 656.45
RIM 655.15
RIM 656.10
RIM 656.25
RIM 656.25
RIM 656.25

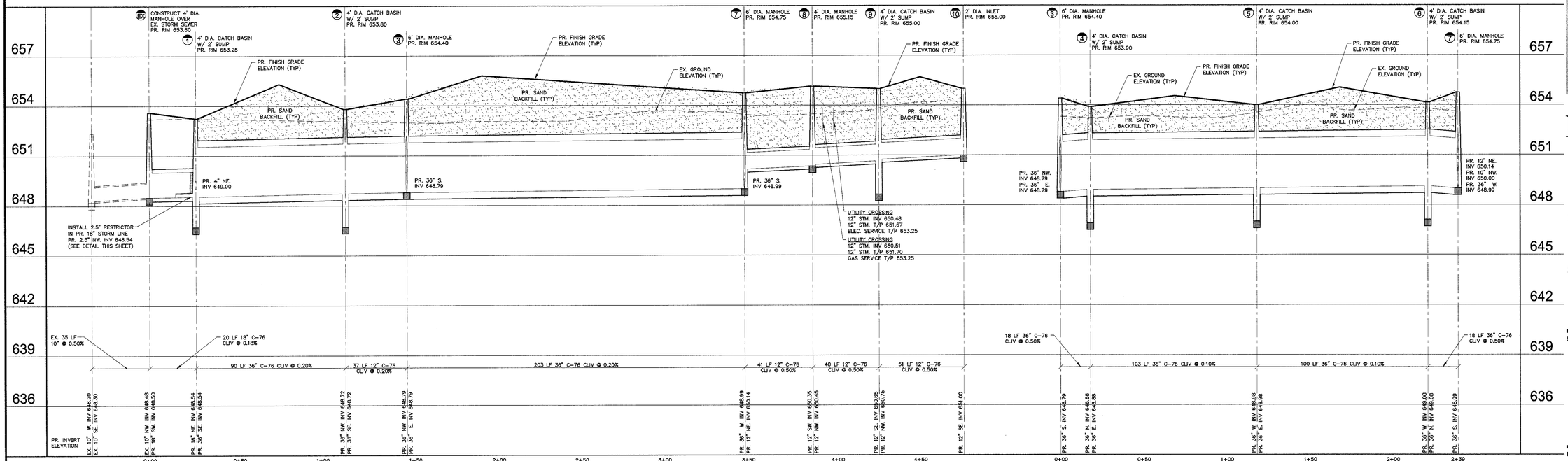

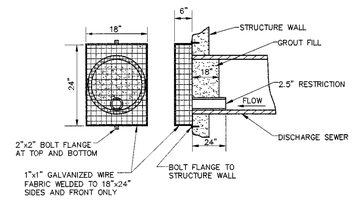

ORIFICE RESTRICTION PIPE W/ WIRE FILTER DETAIL

N.T.S.

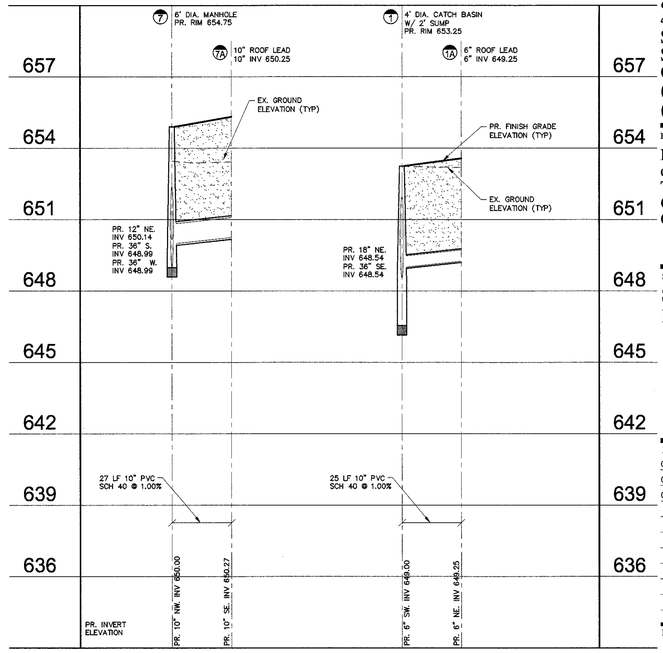

NOWAK & FRAUS

Consulting Engineers
Land Surveyors
Land Planners

1310 N. Stephenson Highway
Royal Oak, MI 48067-1508
Tel. (248) 399-0886
Fax. (248) 399-0805

SEAL

STATE OF MICHIGAN TIMOTHY GERMAIN ENGINEER NO. 42595 LICENSED PROFESSIONAL ENGINEER

PROJECT
Metropolitan Lofts

CLIENT
Neumann Smith & Associates
400 Galleria Officentre
Suite 555
Southfield, MI 48034
Contact: Gene Carroll
(248) 352-8310 - Phone
(248) 352-1821 - Fax

PROJECT LOCATION
Part of the SW 1/4 of Section 22
T. 1 North, R. 11 East
City of Royal Oak,
Oakland County, Michigan

SHEET
Storm Sewer Profile Plan

72 HOURS (3 WORKING DAYS) BEFORE YOU DIG CALL MISS DIG 1-800-482-7171 (TOLL FREE)

DATE/ REVISION
04-29-04 ISSUED FOR CITY REVIEW
06-01-04 REVISED PER CITY REVIEW
06-08-04 REVISED PER CITY REVIEW

DRAWN BY: R. Johnson
DESIGNED BY: R. Johnson
APPROVED BY: T. Germain
DATE: 09-22-03
SCALE: 1"=30'

N/F JOB NO. 3-D040
SHEET NO. C5

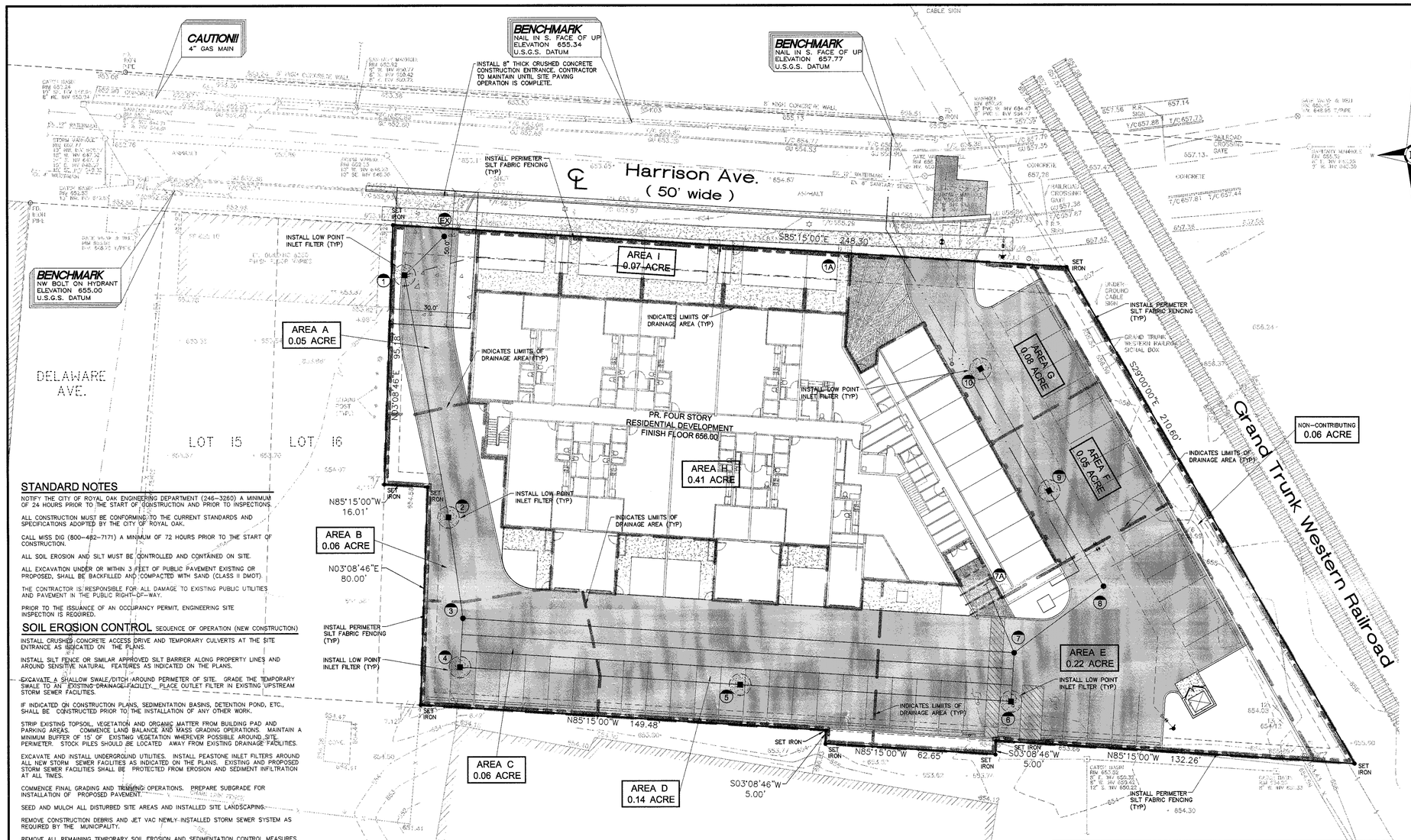

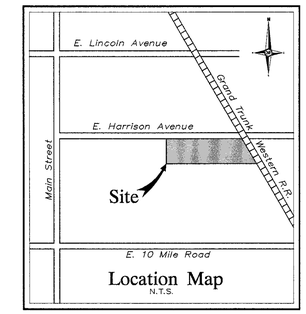

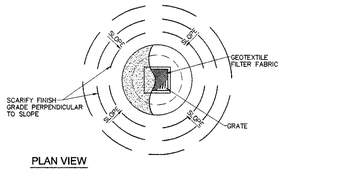

LOW POINT INLET FILTER
N.T.S.

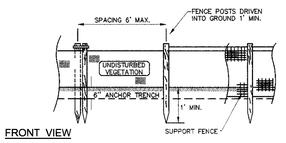

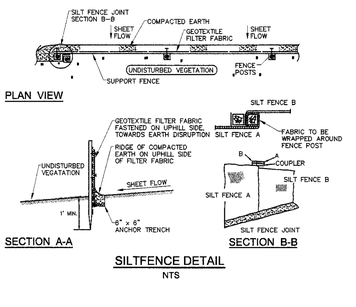

STANDARD NOTES

NOTIFY THE CITY OF ROYAL OAK ENGINEERING DEPARTMENT (246-3260) A MINIMUM OF 24 HOURS PRIOR TO THE START OF CONSTRUCTION AND PRIOR TO INSPECTIONS.

ALL CONSTRUCTION MUST BE CONFORMING TO THE CURRENT STANDARDS AND SPECIFICATIONS ADOPTED BY THE CITY OF ROYAL OAK.

CALL MISS DIG (800-482-7171) A MINIMUM OF 72 HOURS PRIOR TO THE START OF CONSTRUCTION.

ALL SOIL EROSION AND SILT MUST BE CONTROLLED AND CONTAINED ON SITE.

ALL EXCAVATION UNDER OR WITHIN 3 FEET OF PUBLIC PAVEMENT EXISTING OR PROPOSED, SHALL BE BACKFILLED AND COMPACTED WITH SAND (CLASS II DMOT).

THE CONTRACTOR IS RESPONSIBLE FOR ALL DAMAGE TO EXISTING PUBLIC UTILITIES AND PAVEMENT IN THE PUBLIC RIGHT-OF-WAY.

PRIOR TO THE ISSUANCE OF AN OCCUPANCY PERMIT, ENGINEERING SITE INSPECTION IS REQUIRED.

SOIL EROSION CONTROL SEQUENCE OF OPERATION (NEW CONSTRUCTION)

INSTALL CRUSHED CONCRETE ACCESS DRIVE AND TEMPORARY CULVERTS AT THE SITE ENTRANCE AS INDICATED ON THE PLANS.

INSTALL SILT FENCE OR SIMILAR APPROVED SILT BARRIER ALONG PROPERTY LINES AND AROUND SENSITIVE NATURAL FEATURES AS INDICATED ON THE PLANS.

EXCAVATE A SWALLOW SWALE/DITCH AROUND PERIMETER OF SITE. GRADE THE TEMPORARY SWALE TO AN EXISTING DRAINAGE FACILITY. PLACE OUTLET FILTER IN EXISTING UPSTREAM STORM SEWER FACILITIES.

IF INDICATED ON CONSTRUCTION PLANS, SEDIMENTATION BASINS, DETENTION POND, ETC., SHALL BE CONSTRUCTED PRIOR TO THE INSTALLATION OF ANY OTHER WORK.

STRIP EXISTING TOPSOIL, VEGETATION AND ORGANIC MATTER FROM BUILDING PAD AND PARKING AREAS. COMMENCE LAND BALANCE AND MASS GRADING OPERATIONS. MAINTAIN A MINIMUM BUFFER OF 15' OF EXISTING VEGETATION WHEREVER POSSIBLE AROUND SITE PERIMETER. STOCK PILES SHOULD BE LOCATED AWAY FROM EXISTING DRAINAGE FACILITIES.

EXCAVATE AND INSTALL UNDERGROUND UTILITIES. INSTALL PEASTONE INLET FILTERS AROUND ALL NEW STORM SEWER FACILITIES AS INDICATED ON THE PLANS. EXISTING AND PROPOSED STORM SEWER FACILITIES SHALL BE PROTECTED FROM EROSION AND SEDIMENT INFILTRATION AT ALL TIMES.

COMMENCE FINAL GRADING AND TRIMMING OPERATIONS. PREPARE SUBGRADE FOR INSTALLATION OF PROPOSED PAVEMENT.

SEED AND MULCH ALL DISTURBED SITE AREAS AND INSTALLED SITE LANDSCAPING.

REMOVE CONSTRUCTION DEBRIS AND JET VAC NEWLY INSTALLED STORM SEWER SYSTEM AS REQUIRED BY THE MUNICIPALITY.

REMOVE ALL REMAINING TEMPORARY SOIL EROSION AND SEDIMENTATION CONTROL MEASURES ONCE PERMANENT MEASURES ARE ESTABLISHED.

WHENEVER POSSIBLE, THE SITE SHALL BE GRADED TO WITHIN SIX INCHES (6") OF THE PROPOSED FINISH GRADE PRIOR TO INSTALLATION OF UNDERGROUND FACILITIES.

STAGING OF PROPOSED WORK SHALL BE COMPLETED BY THE CONTRACTOR AS REQUIRED TO ENSURE PROGRESSIVE STABILIZATION OF DISTURBED AREAS.

SOIL EROSION CONTROL

CUTTING, FILLING AND GRADING SHALL BE MINIMIZED AND THE NATURAL TOPOGRAPHY OF THE SITE SHALL BE PRESERVED TO THE MAXIMUM POSSIBLE EXTENT, EXCEPT WHERE SPECIFIC FINDINGS DEMONSTRATE THAT MAJOR ALTERATIONS WILL STILL MEET THE PURPOSES AND REQUIREMENTS OF THIS ORDINANCE.

DEVELOPMENT SHALL BE STAGED TO KEEP THE EXPOSED AREAS OF SOIL AS SMALL AS PRACTICABLE.

SOIL EROSION CONTROL MEASURES SHALL BE INSTALLED BETWEEN THE DISTURBED AREA AND ANY WATERCOURSES, INCLUDING RIVERS, STREAMS, CREEKS, LAKES, PONDS AND OTHER WATERCOURSES; WETLANDS; OR ROADWAYS ON OR NEAR THE SITE.

SEDIMENT RESULTING FROM ACCELERATED SOIL EROSION SHALL BE REMOVES FROM RUNOFF WATER BEFORE THAT WATER LEAVES THE SITE.

TEMPORARY AND PERMANENT SOIL EROSION CONTROL MEASURES DESIGNED AND CONSTRUCTED FOR THE CONVEYANCE OF WATER AROUND, THROUGH, OR AWAY FROM THE SITE SHALL BE DESIGNED TO LIMIT THE WATER FLOW TO A NON-EROSIVE VELOCITY.

TEMPORARY SOIL EROSION CONTROL MEASURES SHALL BE REMOVED AFTER PERMANENT SOIL EROSION CONTROL MEASURES HAVE BEEN IMPLEMENTED. ALL SITES SHALL BE STABILIZED WITH PERMANENT SOIL EROSION CONTROL MEASURES.

IF LAKES, PONDS, CREEKS, STREAMS, OR WETLANDS ARE LOCATED ON OR NEAR THE SITE, EROSION CONTROL MEASURES WHICH DIVERT RUNOFF AND TRAP SEDIMENT MUST BE PROVIDED AT STRATEGIC LOCATIONS. STRAW BALE BERMS MAY BE USED AS TEMPORARY STORMWATER DIVERSION STRUCTURES, BUT WILL NOT BE CONSIDERED SUFFICIENT FOR TRAPPING SEDIMENT. THE USE OF SEDIMENT BASINS, FILTER FABRIC, VEGETATED BUFFER STRIPS, AND ROCK FILTERS IN LIEU OF STRAW BALE BERMS SHALL BE STRONGLY ENCOURAGED. OTHER MEASURES MAY BE REQUIRED IF REASONABLY DETERMINED TO BE NECESSARY TO PROTECT A WATERCOURSE OR WETLAND.

WHEN IT IS NOT POSSIBLE TO PERMANENTLY STABILIZE A DISTURBED AREA AFTER AN EARTH CHANGE HAS BEEN COMPLETED OR WHEN SIGNIFICANT EARTH CHANGE ACTIVITY CEASES, TEMPORARY SOIL EROSION CONTROL MEASURES SHALL BE INSTALLED.

PERMANENT EROSION CONTROL MEASURES FOR ALL SLOPES, CHANNELS, DITCHES, OR ANY DISTURBED LAND AREA SHALL BE COMPLETED WITHIN 15 (FIFTEEN) CALENDAR DAYS AFTER FINAL GRADING OR THE FINAL EARTH CHANGE HAS BEEN COMPLETED. ALL TEMPORARY SOIL EROSION CONTROL MEASURES SHALL BE MAINTAINED UNTIL PERMANENT SOIL EROSION CONTROL MEASURES ARE IMPLEMENTED.

VEGETATED BUFFER STRIPS SHALL BE CREATED OR RETAINED ALONG THE EDGES OF ALL LAKES, PONDS, CREEKS, STREAMS, OTHER WATERCOURSES, OR WETLANDS.

EROSION AND SEDIMENTATION CONTROL MEASURES SHALL RECEIVE REGULAR MAINTENANCE TO ASSURE PROPER FUNCTIONING.

ALL GRADING PLANS AND SPECIFICATIONS, INCLUDING EXTENSIONS OF PREVIOUSLY APPROVED PLANS, SHALL INCLUDE PROVISIONS FOR EROSION AND SEDIMENT CONTROL IN ACCORDANCE WITH, BUT NOT LIMITED TO, THE STANDARDS CONTAINED IN THE "STANDARDS AND SPECIFICATIONS FOR SOIL EROSION AND SEDIMENT CONTROL", PUBLISHED BY THE OAKLAND SOIL CONSERVATION DISTRICT.

Weighted Run-off Coefficient Calculation - Site

Site Area:	52,327.22	S.F.	or 1.201	Acres
Surface No. 1 - Pavement:	25,916.52	S.F.	or 0.595	Acres
Surface No. 2 - Building:	17,584.78	S.F.	or 0.404	Acres
Surface No. 3 - Landscape:	8,825.92	S.F.	or 0.203	Acres
Surface No. 4 - Other:	0.00	S.F.	or 0.000	Acres
Sum of Individual Areas:	52,327.22	S.F.	or 1.201	Acres
Surface No. 1 - Coefficient:	0.90			
Surface No. 2 - Coefficient:	0.90			
Surface No. 3 - Coefficient:	0.15			
Surface No. 4 - Coefficient:	0.00			

Required Formula:

$$C\ (\text{Average}) = \frac{\text{Area 1} * C1 + \text{Area 2} * C2 + \text{Area 3} * C3 + \text{Area 4} * C4}{\text{Area 1} + \text{Area 2} + \text{Area 3} + \text{Area 4}}$$

C (Average) = 0.773

Detention Calculations - Oakland County Method
(10) Year Storm Event - With Outlet (Orifice)

Contributing Area:	1.201	Acres
Allowable Outflow, Qa:	0.360	CFS
Runoff Coefficient, C:	0.773	Impervioussness
Maximum Allowable Outflow, Qo:	0.323	CFS / Acre * Impery
Ts Storage Time (10 Yr):	117.567	Minutes
Vs Storage Time (10 Yr):	7,139.109	CF / Acre * Impery
Vt Total Volume (10 Yr):	6,627.756	Cubic Feet
Volume Required:	6,627.756	Cubic Feet

Detention Volume Calculation - Underground Pipe Storage

Formula: $V = 3.14159 * (\text{Pipe Radius})2 * \text{Length of Pipe}$

Pipe Diameter	36.00	Inch
Length, L:	975.60	Linear Feet
Radius, R:	1.50	Feet
Volume Provided:	6,891.86	Cubic Feet

Restrictor Calculation - Royal Oak Method

Formula: $Q = (0.62 * A) * (2gh^{.5})$

Location: Orifice Restrictor at Structure N

Contributing Acreage, A:	1.130	Acres
Allowable Outflow / Acre, Qa:	0.360	CFS
Storage Elevation:	653.40	Feet
Outlet Elevation:	648.50	Feet
Depth of Storage, h:	4.90	Feet
Maximum Allowable Outflow, Qa:	0.360	CFS
Required Restrictor Size:	0.027	Square Feet
Design Restrictor Diameter:	2.235	Inch Diameter
Restrictor Required by Design:	2.235	Inch Diameter

Provide 2.5" Diameter Restrictor per Plan Details

CONSTRUCTION SEQUENCE / TIMING SCHEDULE

1.	INSTALL SILT FABRIC FENCING AND TEMP. CONSTRUCTION ACCESS PER PLAN.	JUNE 2004
2.	CONDUCT DEMOLITION AND SITE CLEARING AS REQUIRED PER PLAN.	JUNE 2004
3.	COMMENCE MASS GRADING OF SITE.	JUNE 2004
4.	COMMENCE UNDERGROUND UTILITIY INSTALLATIONS.	JUNE 2004
5.	INSTALL INLET FILTERS ON PROPOSED DRAINAGE INLET STRUCTURES PER PLAN.	JULY 2004
6.	FILL IN TEMPORARY SEDIMENTATION TRAPS AND PAVE SITE.	JULY 2004
7.	COMPLETE ALL BUILDING CONSTRUCTION, LANDSCAPE ACTIVITY AND SITE RESTORATION.	OCTOBER 2004
8.	JET VAC NEW STORM SEWER SYSTEM AS REQUIRED.	OCTOBER 2004
9.	REMOVE ALL TEMPORARY SOIL EROSION MEASURES.	NOVEMBER 2004

City of Royal Oak, Oakland County, MI
Storm Sewer Calculations

T= 15 Minutes Time of Concentration
I = 175 / (T+25) 10 Year Storm Event Intensity
n (Conc.) 0.013 Manning's Roughness Coefficient
n (Pvc) 0.009 Manning's Roughness Coefficient

Project No: 3-D040
Project Name: Metropolitan Lofts
Location: Harrison Avenue
Dated: 03/17/04
Revised: 5/21/2004, 6/08/04

Drainage Area (Location)	From Manhole Number	To Manhole Number	Drainage Area (Acres)	Runoff Coefficient (C)	Equivalent Area (C * A)	Total Area (Sum C * A)	Time of Concentration (Minutes)	Rainfall Intensity (Inches/Hr.)	Actual Discharge (CFS)	Pipe Size (Inches)	Pipe Slope (% Slope)	Pipe Length (Feet)	Flow Full Velocity (Ft / Sec)	Time of Flow (Minutes)	Full Pipe Capacity (CFS)	H. G. Elev. Upper End (Feet)	H. G. Elev. Lower End (Feet)	H. G. Slope (% Slope)	Theoretical Velocity (Ft / Sec)	Ground Elevation (Upper)	Change in Elevation (Feet)	Invert Elev. Upper End (Feet)	Invert Elev. Lower End (Feet)
G	10	9	0.080	0.90	0.072	0.072	15.00	4.375	0.315	12	0.50	51	3.208	0.26	2.52	650.92	650.92	0.008	0.401	655.00	0.26	651.00	650.75
F	9	8	0.050	0.90	0.045	0.117	15.26	4.347	0.509	12	0.50	40	3.208	0.21	2.52	650.92	650.91	0.020	0.648	655.00	0.20	650.65	650.45
E	8	7	0.000	0.90	0.000	0.117	15.47	4.324	0.506	12	0.50	41	3.208	0.21	2.52	650.91	650.90	0.020	0.644	655.15	0.21	650.35	650.15
E	7	3	0.630	0.90	0.567	0.684	15.67	4.303	2.943	36	0.10	203	2.984	1.13	21.09	650.90	650.90	0.002	0.416	654.90	0.20	648.99	648.79
C	3	2	0.200	0.90	0.180	0.684	16.80	4.187	2.864	36	0.20	37	4.220	0.15	29.83	650.90	650.90	0.002	0.405	654.60	0.07	648.79	648.72
B	2	1	0.060	0.90	0.054	0.918	16.92	4.175	3.832	36	0.20	90	4.220	0.35	29.83	650.90	650.90	0.003	0.542	653.80	0.18	648.72	648.54
A	1	EX	0.120	0.90	0.108	1.026	17.28	4.139	4.247	18	0.18	20	2.522	0.13	4.46	650.93	650.90	0.163	2.403	653.25	0.04	648.54	648.50
E	6	7	0.220	0.90	0.198	0.198	15.00	4.375	0.866	36	0.50	18	6.672	0.04	47.16	650.90	650.90	0.000	0.123	654.15	0.09	649.11	649.02
D	5	4	0.220	0.90	0.198	0.198	15.00	4.375	0.866	36	0.10	203	2.984	1.13	21.09	650.90	650.90	0.000	0.123	654.00	0.20	649.01	648.81
C	4	3	0.060	0.90	0.054	0.055	15.38	4.334	0.236	36	0.50	18	6.672	0.04	47.16	650.90	650.90	0.000	0.033	653.90	0.09	648.91	648.82
H	7a	7	0.410	0.90	0.369	0.369	15.00	4.375	1.614	10	1.00	27	5.603	0.08	3.16	651.04	650.97	0.260	2.960	654.15	0.27	650.25	649.98
I	1a	1	0.070	0.90	0.063	0.063	15.00	4.375	0.276	4	1.00	160	3.150	0.85	0.27	652.54	650.93	1.005	3.158	654.15	1.60	650.60	649.00

LEGAL DESCRIPTION

PART OF THE S.W. 1/4 OF SECTION 22, T.1N., R.11E., CITY OF ROYAL OAK, OAKLAND COUNTY, MICHIGAN, DESCRIBED AS: LOT 17, EXCEPT THE SOUTH 80.00 FEET OF THE WEST 16.00 FEET, AND ALL OF LOTS 18 THROUGH 22, INCLUSIVE, "ERBENDALE PARK ADDITION", AS RECORDED IN LIBER 11, PAGE 8 OF PLATS, OAKLAND COUNTY RECORDS. ALSO, PART OF LOT 1 OF "ASSESSOR'S PLAT NO. 27", AS RECORDED IN LIBER 54, PAGE 22 OF PLATS, OAKLAND COUNTY RECORDS. ALL BEING MORE PARTICULARLY DESCRIBED AS BEGINNING AT THE NORTHWEST CORNER OF SAID LOT 17 THENCE ALONG THE SOUTH RIGHT-OF-WAY LINE OF HARRISON AVENUE (50' WIDE-PUBLIC) ALSO BEING THE NORTH LINE OF SAID "ERBENDALE PARK ADDITION" S85°15'00"E, 248.30 FEET TO THE NORTHEAST CORNER OF SAID LOT 22, THENCE ALONG THE EAST LINE OF SAID LOT 22 ALSO BEING THE WESTERLY RIGHT-OF-WAY LINE OF GRAND TRUNK WESTERN RAILROAD (83' WIDE) AS PLATTED S.29°00'00"E, 210.60 FEET TO THE SOUTHEAST CORNER OF SAID LOT 22, THENCE ALONG THE SOUTH LINE OF SAID "ERBENDALE PARK ADDITION" ALSO BEING THE NORTH LINE OF SAID "ASSESSOR'S PLAT NO. 27" N85°15'00"W, 132.26 FEET, THENCE S03°08'46"W, 5.00 FEET, THENCE N85°15'00"W, 62.65 FEET, THENCE N03°08'46"E, 5.00 FEET TO A POINT ON THE SOUTH LINE OF SAID "ERBENDALE PARK ADDITION" ALSO BEING THE NORTH LINE OF SAID "ASSESSOR'S PLAT NO. 27", THENCE ALONG SAID LINE N85°15'00"W, 149.48 FEET, THENCE N03°08'46"E, 80.00 FEET, THENCE N85°15'00"W, 16.01 FEET TO A POINT ON THE WEST LINE OF SAID LOT 17, THENCE ALONG SAID WEST LINE N03°08'46"E, 95.18 FEET TO THE POINT OF BEGINNING.

SITE CONTAINING 52,327 SQUARE FEET OR 1.20 ACRES.

ESTIMATED QUANTITIES

SOIL EROSION

DESCRIPTION	QUANTITY	UNITS
SILT FABRIC FENCING	940	L.F.
INLET FILTER	7	EA.

SOIL EROSION CONTROL LEGEND

- INDICATES LIMITS OF SILT FABRIC FENCE
- INDICATES LIMITS OF DRAINAGE DISTRICT AREA
- INDICATES LOW POINT INLET FILTER
- AREA A 0.00 ACRE — INDICATES DRAINAGE DISTRICT AREA

NOWAK & FRAUS
Consulting Engineers
Land Surveyors
Land Planners
1310 N. Stephenson Highway
Royal Oak, MI 48067-1508
Tel. (248) 399-0886
Fax. (248) 399-0805

SEAL

STATE OF MICHIGAN — TIMOTHY L. GRIESON — ENGINEER NO. 42595 — LICENSED PROFESSIONAL ENGINEER

PROJECT
Metropolitan Lofts

CLIENT
Neumann Smith & Associates
400 Galleria Officentre
Suite 555
Southfield, MI 48034
Contact: Gene Carroll
(248) 352-8310 - Phone
(248) 352-1821 - Fax

PROJECT LOCATION
Part of the SW 1/4 of Section 22
T. 1 North, R. 11 East
City of Royal Oak,
Oakland County, Michigan

SHEET
Soil Erosion/ Drainage Area Plan

72 HOURS (3 WORKING DAYS) BEFORE YOU DIG CALL MISS DIG 1-800-482-7171 (TOLL FREE)

DATE/ REVISION
04-29-04 ISSUED FOR CITY REVIEW
06-01-04 REVISED PER CITY REVIEW
06-08-04 REVISED PER CITY REVIEW

DRAWN BY: R. Johnson
DESIGNED BY: R. Johnson
APPROVED BY: T. Germain
DATE: 09-22-03
SCALE: 1"=20'

N/F JOB NO. 3-D040
SHEET NO. C6

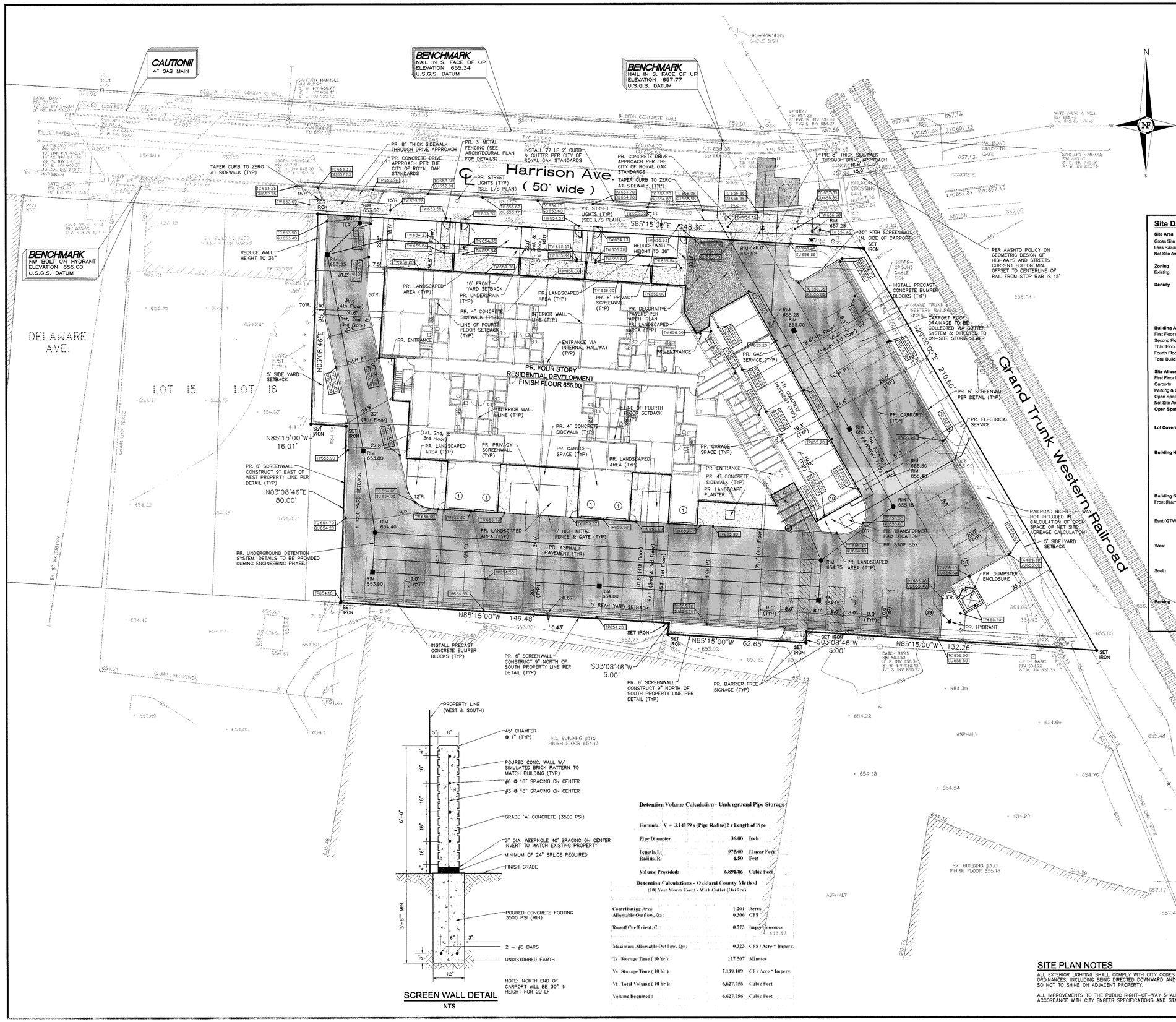
CAUTION!!
4" GAS MAIN
BENCHMARK
NAIL IN S. FACE OF UP
ELEVATION 655.34
U.S.G.S. DATUM
BENCHMARK
NAIL IN S. FACE OF UP
ELEVATION 657.77
U.S.G.S. DATUM
BENCHMARK
NW BOLT ON HYDRANT
ELEVATION 655.00
U.S.G.S. DATUM
Harrison Ave.
(50' wide)
DELAWARE AVE.
LOT 15
LOT 16
Grand Trunk Western Railroad
PR. FOUR STORY
RESIDENTIAL DEVELOPMENT
FINISH FLOOR 656.60
PR. 8" THICK SIDEWALK THROUGH DRIVE APPROACH
PR. CONCRETE DRIVE APPROACH PER THE CITY OF ROYAL OAK STANDARDS
TAPER CURB TO ZERO AT SIDEWALK (TYP)
PR. 3' METAL FENCING (SEE ARCHITECURAL PLAN FOR DETAILS)
INSTALL 77 LF 2' CURB & GUTTER PER CITY OF ROYAL OAK STANDARDS
PR. STREET LIGHTS (TYP) (SEE L/S PLAN)
S85°15'00"E 248.30'
PR. 8" THICK SIDEWALK THROUGH DRIVE APPROACH
30" HIGH SCREENWALL (N. SIDE OF CARPORT)
SET IRON
REDUCE WALL HEIGHT TO 36"
PR. LANDSCAPED AREA (TYP)
10' FRONT YARD SETBACK
PR. UNDERDRAIN (TYP)
PR. 4" CONCRETE SIDEWALK (TYP)
LINE OF FOURTH FLOOR SETBACK (TYP)
INTERIOR WALL LINE (TYP)
PR. 6' PRIVACY SCREENWALL (TYP)
PR. DECORATIVE PAVERS PER ARCH. PLAN
PR. ENTRANCE
ENTRANCE VIA INTERNAL HALLWAY (TYP)
PR. GAS SERVICE (TYP)
PR. CONCRETE PATH (TYP)
PR. CARPORT (TYP)
PR. ELECTRICAL SERVICE
PR. 6' SCREENWALL PER DETAIL (TYP)
CARPORT ROOF DRAINAGE TO BE COLLECTED VIA GUTTER SYSTEM & DIRECTED TO ON-SITE STORM SEWER
S29°00'00"E 210.60'
PER AASHTO POLICY ON GEOMETRIC DESIGN OF HIGHWAYS AND STREETS CURRENT EDITION MIN. OFFSET TO CENTERLINE OF RAIL FROM STOP BAR IS 15'
RAILROAD RIGHT-OF-WAY NOT INCLUDED IN CALCULATION OF OPEN SPACE OR NET SITE ACREAGE CALCULATION
5' SIDE YARD SETBACK
PR. TRANSFORMER PAD LOCATION
PR. STOP BOX
PR. DUMPSTER ENCLOSURE
PR. HYDRANT
PR. LANDSCAPED AREA (TYP)
PR. GARAGE SPACE (TYP)
PR. 4' CONCRETE SIDEWALK (TYP)
PR. LANDSCAPE PLANTER
6' HIGH METAL FENCE & GATE (TYP)
PR. ASPHALT PAVEMENT (TYP)
PR. UNDERGROUND DETENTION SYSTEM. DETAILS TO BE PROVIDED DURING ENGINEERING PHASE.
PR. 6' SCREENWALL CONSTRUCT 9" EAST OF WEST PROPERTY LINE PER DETAIL (TYP)
N03°08'46"E 80.00'
N85°15'00"W 16.01'
N85°15'00"W 149.48'
S03°08'46"W 5.00'
N85°15'00"W 62.65'
S03°08'46"W 5.00'
N85°15'00"W 132.26'
INSTALL PRECAST CONCRETE BUMPER BLOCKS (TYP)
PR. 6' SCREENWALL CONSTRUCT 9" NORTH OF SOUTH PROPERTY LINE PER DETAIL (TYP)
PR. BARRIER FREE SIGNAGE (TYP)
EX. BUILDING #315
FINISH FLOOR 654.13
EX. BUILDING #331
FINISH FLOOR 655.18
ASPHALT
CHAIN LINK FENCE
UNDER-GROUND CABLE (TYP)
CATCH BASIN
RIM 653.25
RIM 653.60
RIM 654.40
RIM 653.80
RIM 654.00
RIM 654.75
RIM 655.28
RIM 655.00
RIM 655.50
RIM 655.45
RIM 655.15
RIM 656.52
RIM 657.25
RIM 653.90
RIM 654.70
RIM 654.10
RIM 656.86
RIM 657.35
RIM 656.08
RIM 656.20
RIM 656.50
RIM 657.45
RIM 656.00
RIM 656.35
RIM 655.70
RIM 656.30
RIM 655.80
RIM 655.40
RIM 654.90
RIM 655.50
RIM 655.40
RIM 655.60
RIM 655.55
RIM 656.00
RIM 655.55
RIM 654.55
RIM 654.25
RIM 654.05
RIM 654.12
RIM 653.77
RIM 653.32
RIM 653.88
RIM 654.22
RIM 654.69
RIM 654.18
RIM 654.64
RIM 654.76
RIM 654.29
RIM 657.17
RIM 657.41
RIM 653.98
RIM 654.30
RIM 654.83
RIM 655.48
RIM 655.13
RIM 655.08
RIM 654.95
RIM 654.80
RIM 654.63
RIM 654.53
RIM 654.48
RIM 654.31
RIM 654.27
RIM 654.18
RIM 654.03
RIM 653.96
RIM 653.88
RIM 653.81
RIM 653.71
RIM 653.64
RIM 653.58
RIM 653.53
RIM 653.49
RIM 653.43
RIM 653.39
RIM 653.34
RIM 653.29
RIM 653.25
RIM 653.21
RIM 653.17
RIM 653.13
RIM 653.09
RIM 653.05
RIM 653.02
RIM 652.98
RIM 652.94
RIM 652.90
RIM 652.86
RIM 652.83
RIM 652.79
RIM 652.75
RIM 652.71
RIM 652.67
RIM 652.63
RIM 652.59
RIM 652.55
RIM 652.51
RIM 652.47
RIM 652.43
RIM 652.39
RIM 652.35
RIM 652.31
RIM 652.27
RIM 652.23
RIM 652.19
RIM 652.15
RIM 652.11
RIM 652.07
RIM

ROOM FINISH SCHEDULE

FLR	ROOM #	ROOM NAME	FLOOR	BASE	ALL WALLS	WALLS NORTH	WALLS EAST	WALLS SOUTH	WALLS WEST	CEILING FINISH	CEILING HEIGHT	NOTES/KEY NOTES
FIRST FLOOR	101	STAIR 2	CONC-S	–	EXP.	–	–	–	–	EXP.	–	
	102	CORRIDOR	CPT-1	WD-1	–	GB-PNT C,E	EXP.	GB-PNT C,E	EXP.	EXP.	11'-0"	
	103	VESTIBULE	CONC-S	–	EXP.	–	–	–	–	EXP.	11'-0"	
	104	ELEVATOR LOBBY	CONC-S	–	EXP.	–	–	–	–	EXP.	11'-0"	
	105	ELEVATOR MACHINE ROOM	CONC-S	–	EXP.	–	–	–	–	EXP.	11'-0"	
	106	STAIR 1	CONC-S	–	EXP.	–	–	–	–	EXP.	–	
	107	VESTIBULE	CONC-S	–	EXP.	–	–	–	–	EXP.	11'-0"	
	108	GARAGE	CONC-S	WD (AT GB)	–	GB-PNT C	EXP.	EXP.	EXP.	EXP.	11'-0"	
	109	WATER	CONC-S	WD (AT GB)	–	EXP.	EXP.	GB-PNT C	EXP.	EXP.	11'-0"	
SECOND FLOOR	201	STAIR 2	CONC-S	–	–	EXP.	EXP.	EXP.	EXP.	EXP.	–	
	202	CORRIDOR	CPT-1	WD-1	–	GB-PNT C,E	EXP.	GB-PNT C,E	EXP.	EXP.	11'-0"	
	203	ELEVATOR LOBBY	CPT-1	WD-1	–	GB-PNT C,E	EXP.	GB-PNT C,E	EXP.	EXP.	11'-0"	
	204	STAIR 1	CONC-S	–	–	EXP.	EXP.	EXP.	EXP.	EXP.	–	
	205	STORAGE	CONC-S	–	EXP.	–	–	–	–	EXP.	11'-0"	
	206	MECHANICAL/ELECTRICAL	CONC-S	–	EXP.	–	–	–	–	EXP.	11'-0"	
THIRD FLOOR	301	STAIR 2	CONC-S	–	–	EXP.	EXP.	EXP.	EXP.	EXP.	–	
	302	CORRIDOR	CPT-1	WD-1	–	GB-PNT C,E	EXP.	GB-PNT C,E	EXP.	EXP.	11'-0"	
	303	ELEVATOR LOBBY	CPT-1	WD-1	–	GB-PNT C,E	EXP.	GB-PNT C,E	EXP.	EXP.	11'-0"	
	304	STAIR 1	CONC-S	–	–	EXP.	EXP.	EXP.	EXP.	EXP.	–	
TYPICAL UNITS		CLOSET	CONC-ST	WD	–	GB-PNT C	GB-PNT C	GB-PNT C	GB-PNT C	EXP.	11'-0"	
		MECHANICAL	CONC-S	WD (AT GB)	–	GB-PNT C	GB-PNT C	GB-PNT C	EXP.	EXP.	11'-0"	
		GUEST BATH	CONC-ST	WD	–	GB-PNT C	CT/GB-PNT C	CT	CT/GB-PNT C	GB-PNT C	8'-0"	
		LIVING/DINING	CONC-ST	WD (AT GB)	–	GB-PNT C	EXP.	GB-PNT C	GB-PNT C	EXP.	11'-0"	
		KITCHEN	CONC-ST	WD (AT GB)	–	GB-PNT C	–	GB-PNT C	CT	EXP.	11'-0"	
		MASTER BEDROOM	CONC-ST	WD (AT GB)	–	GB-PNT C	–	GB-PNT C	EXP.	EXP.	11'-0"	
		MASTER CLOSET	CONC-ST	WD (AT GB)	–	GB-PNT C	GB-PNT C	GB-PNT C	EXP.	EXP.	11'-0"	
		MASTER BATH	CONC-ST	WD (AT GB)	–	CT/GB-PNT C	GB-PNT C	GB-PNT C	EXP.	GB-PNT C	8'-0"	CERAMIC TILE IN SHOWER ENCLOSURE
		SLEEPING (UNIT 10)	CONC-ST	WD (AT GB)	–	EXP.	EXP.	GB-PNT C	GB-PNT C	EXP.	11'-0"	
		GARAGE	CONC-S	–	–	GB-PNT C	EXP.	EXP.	EXP.	EXP.	11'-0"	

ABBREVIATIONS

ACT	ACOUSTICAL CEILING TILE
ALUM	ALUMINUM
CMU	CONCRETE MASONRY UNITS
CMUP	CONCRETE MASONRY UNITS-PAINTED
CONC-S	CONCRETE-SEALED
CONC-ST	CONCRETE-STAINED
CPT	CARPET/CARPET TILE
CT	CERAMIC TILE
DR	DRAPERY
EIFS	EXTERIOR INSULATION AND FINISHING SYSTEM
EXP.	EXPOSED CONSTRUCTION
FAB	FABRIC COVERED ACCOST. TREATMENT
FWC	FABRIC WALL COVERING
GB	GYPSUM BOARD
GB-PNT	GYPSUM BOARD-PAINTED
GL	GLASS
GR	GRANITE
MAT	ENTRANCE MATTING
OP PARTN	OPERABLE PARTITION
PNT	PAINT
PL	PLASTIC LAMINATE
RB	RESILIENT BASE
RES	RESILIENT FLOORING
RTR	RUBBER TREADS/RISERS
SL	SLATE TILES
SSM	SOLID SURFACING MATERIAL
VCT	VINYL COMPOSITION TILE
VWC	VINYL WALL COVERING
WD	WOOD

TYPICAL UNIT FINISH NOTES

THE FINISH SCHEDULE USES UNIT 4 FOR WALL FINISH LOCATIONS. MIRROR OR ADJUST WALL FINISH LOCATIONS AS NEEDED BY UNIT ORIENTATION.

PAINTING NOTES

– PAINT ALL LINTELS TO MATCH BRICK COLOR ADJACENT TO LINTEL (I.E. LINTEL IN BRICK A PAINT PNT-A)

– PAINT ALL EXPOSED STEEL PNT-D UNLESS NOTED OTHERWISE.

PNT-A: BENJAMIN MOORE 1197

PNT-B: BENJAMIN MOORE 1118

PNT-C: BENJAMIN MOORE ATRIUM WHITE

PNT-D: BENJAMIN MOORE 1613 (ALL METAL SURFACES)

PNT-E: BENJAMIN MOORE 1616

CPT-1: SHAW MOVEMENT STYLE #50875, COLOR: CORAL 75500

CT (BATH): EIFFELGRAS 12X12 TILE ARGENT NATURAL ED3006

CT (KITCHEN ALTERNATE): AMERICAN OCEAN 6X6 PORCELAIN TILE MT 25 ICE WHITE

RT: ALLSTATE RUBBER STAIR TREADS COLOR #33 ARDECHE

WD. BASE: 1/2" x 2 1/2" PINE READY FOR PAINT

NEUMANN SMITH & ASSOCIATES

Architecture
Planning
Interior Design

400 Galleria Officentre
Suite 555
Southfield, Michigan 48034

248-352-8310
FAX 248-352-1821
NS@neumannsmith.com

Metro Lofts
Royal Oak, Michigan

Revisions

STATE OF MICHIGAN — JOEL LAWRENCE SMITH — REGISTERED ARCHITECT

MAY 28, 2004 – ISSUED FOR BIDS

Date –

Drawn MGD

Checked MGD

Approved PTM

Bidpak Number [redacted]

– Preliminary
■ Construction
– Record

Do not scale
Use figured dimensions only
Copyright © 2001

Job Number 23091

Title **Room Finish Schedule**

Scale: As Noted

Sheet **A101**

F:\2003\23091 - Metro Lofts\30-Construction Documents\23091A101.dwg, 5/28/2004 4:22:46 PM, pat_Xerox 5100p-scanner.pc3, 1:1, Neumann/Smith & Assoc.

DOOR SCHEDULE

	DR #	DOOR SIZE	DOORS TYPE	DOORS MATERIAL	DOORS FINISH	FRAME TYPE	FRAME MATERIAL	FRAME FINISH	HEAD DETAIL	JAMB DETAIL	THRES. DETAIL	FIRE RATING	STC RATING	HARD-WARE	REMARKS
FIRST FLOOR	–														
	101	3'-0" x 7'-0"	A	ALUM.	ANODIZED	–	ALUM.	ANODIZED	2, 3/A412	4/A102 SIM.	1/A412	–		1	SEE SECTION 1/A406 FOR FRAME DETAILS
	102A	3'-0" x 7'-0"	A	H.M.	PAINT D	1A	H.M.	PAINT A	5/A102	4/A102		60 MIN.		2	
	102B	3'-0" x 7'-0"	B	H.M.	PAINT D	1A	H.M.	PAINT B	5/A102	4/A102		20 MIN.		3	PROVIDE CARPET REDUCER STRIP
	103	3'-0" x 8'-0"	C	ALUM.	ANODIZED	3	ALUM.	ANODIZED	13/A102	12, 14/A102	1/A412	–		4	
	104A	(2) 3'-8" X 8'-0"	A.2	H.M.	PAINT D	2A	H.M.	PAINT B	5/A102	4/A102		60 MIN.		5	
	104B	3'-0" x 8'-0"	C	ALUM.	ANODIZED	3A	ALUM.	ANODIZED	13/A102	11/A102	1/A412 SIM.	–		6	
	105	3'-0" x 7'-0"	A	H.M.	PAINT D	1A	H.M.	PAINT B	5/A102	4/A102		60 MIN.		7	
	106	(2) 3'-0" x 8'-0"	C.2	ALUM.	ANODIZED	4A	ALUM.	ANODIZED	13/A102	11/A102	1/A412 SIM.	–		8	
	107	(2) 3'-0" x 8'-0"	C.2	ALUM.	ANODIZED	4	ALUM.	ANODIZED	13/A102	11,12 O.H./A102	1/A412	–		9	
	108A	9'-0" x 7'-0"	E	STEEL	PREFIN.	–	–	–	8/A102	7/A102		–		10	SECTION OVERHEAD DOOR (10 REQUIRED); FINISH TO MATCH PAINT D
	108B	3'-0" x 7'-0"	A	H.M.	PAINT D	1A	H.M.	PAINT B	5/A102	4/A102		60 MIN.		11	180° HINGE
	109	3'-0" x 7'-0"	A	H.M.	PAINT D	1	H.M.	PAINT D	2/A102	1/A102				12	
SECOND FLOOR	202	3'-0" x 7'-0"	B	H.M.	PAINT D	1A	H.M.	PAINT A	5/A102	4/A102		60 MIN.		13	
	204	3'-0" x 7'-0"	B	H.M.	PAINT D	1A	H.M.	PAINT B	5/A102	4/A102		60 MIN.		13	
	205	3'-0" x 7'-0"	A	H.M.	PAINT D	1A	H.M.	PAINT B	5/A102	4/A102		20 MIN.		14	
	206	3'-0" x 7'-0"	A	H.M.	PAINT D	1A	H.M.	PAINT D	5/A102	4/A102		–		12	
THIRD FLOOR	302	3'-0" x 7'-0"	B	H.M.	PAINT D	1A	H.M.	PAINT A	5/A102	4/A102		60 MIN.		13	
	304	3'-0" x 7'-0"	B	H.M.	PAINT D	1A	H.M.	PAINT B	5/A102	4/A102		60 MIN.		13	
	305	3'-0" x 7'-2"	C.1	ALUM.	ANODIZED	7	ALUM.	ANODIZED	10/A102 SIM.	9/A102 SIM.				15	
	306	3'-0" x 7'-2"	C.1	ALUM.	ANODIZED	1	ALUM.	ANODIZED	10/A102 SIM.	9/A102 SIM.				15	
UNIT DOORS	A	3'-0" x 7'-0"	A	WOOD	PREFIN.	1	H.M.	PAINT D	2/A102	1/A102		20 MIN.		16	PROVIDE CARPET REDUCER STRIP
	B	3'-0" x 7'-0"	D	WOOD	PREFIN.	–	–	–	6/A102	–				17	CLOSET DOORS TO RECEIVE HARDWARE SET #18
	B.1	2'-0" x 7'-0"	D	WOOD	PREFIN.	–	–	–	6/A102	–					
	C	(2) 3'-0" x 7'-0"	D	WOOD	PREFIN.	–	–	–	3/A800	–				19	
	C.1	(2) 2'-8" x 7'-0"	D	WOOD	PREFIN.	–	–	–	3/A800	–				20	
	D	(2) 2'-11" x 7'-0"	F	ALUM.	ANODIZED	5	ALUM.	ANODIZED	3/A410	7, 11/A420	1, 2/A410			21	
	D.1	(2) 3'-0 1/4" x 7'-0"	F	ALUM.	ANODIZED	5	ALUM.	ANODIZED	3/A410	7, 11/A420	1, 2/A410				
	E	(2) 2'-6" x 7'-0"	D	WOOD	PREFIN.	–	–	–	3/A102	–					
	F	3'-0" x 7'-0"	A	H.M.	PAINT D	1A	H.M.	PAINT D	5/A102	4/A102		–		22	
	G	9'-0" x 7'-0"	E	STEEL	PREFIN.	–	–	–	8/A102	7/A102		–		10	FINISH TO MATCH PAINT D
	H	(3) 3'-0" x 7'-0"	D	WOOD	PREFIN.	–	–	–	3/A102	–					
	I	(2) 2'-10" x 7'-0"	C.3	ALUM.	ANODIZED	6	ALUM.	ANODIZED	14/A411	8, 12 A420	–				
	J	2'-10" x 7'-2"	–	ALUM.	ANODIZED	8	ALUM.	ANODIZED	3/A102	4/A102 SIM.	15/A410				

DOOR TYPES

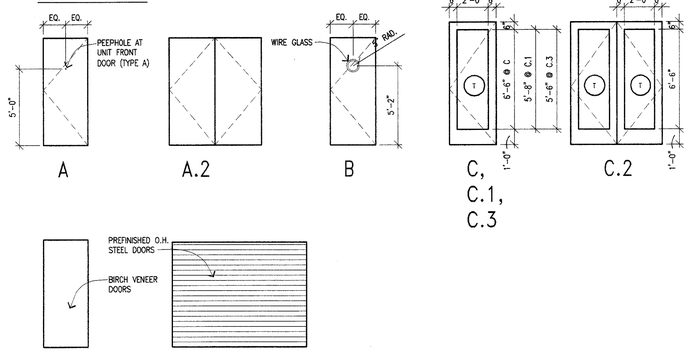

A A.2 B C, C.1, C.3 C.2

D E

DOOR FRAME TYPES

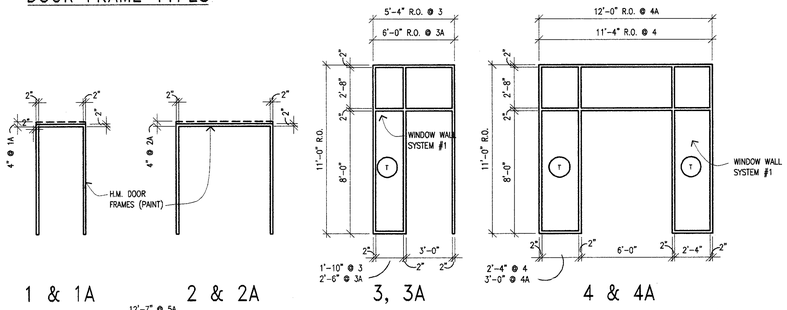

1 & 1A 2 & 2A 3, 3A 4 & 4A

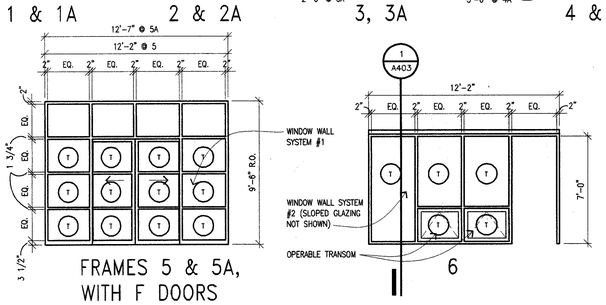

FRAMES 5 & 5A, WITH F DOORS

6

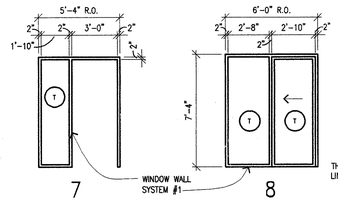

T INDICATES TEMPERED GLASS

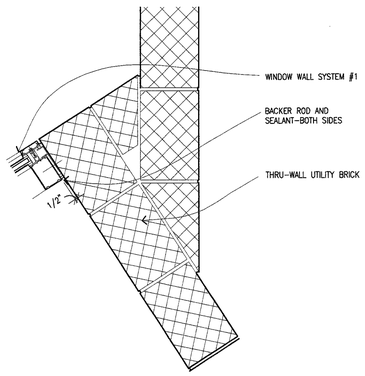

14 A102 JAMB 1 1/2"=1'-0"

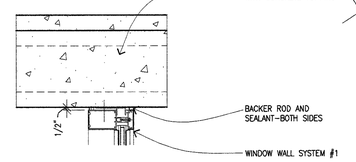

13 A102 HEAD 1 1/2"=1'-0"

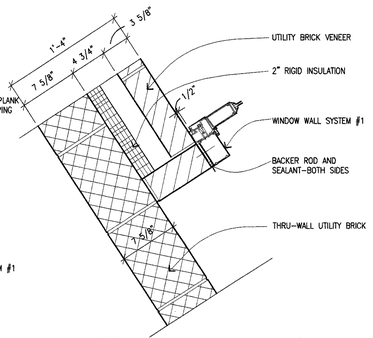

12 A102 JAMB 1 1/2"=1'-0"

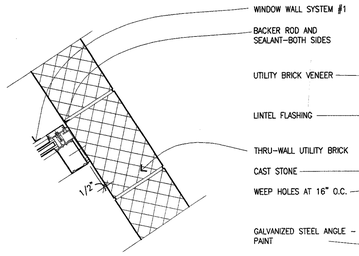

11 A102 JAMB 1 1/2"=1'-0"

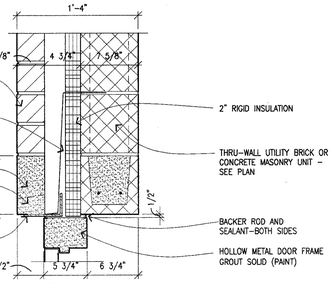

10 A102 HEAD 1 1/2"=1'-0"

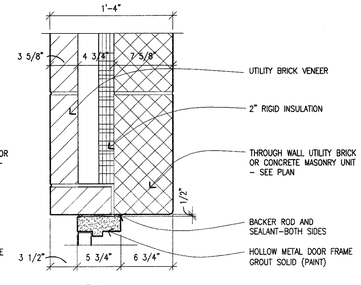

9 A102 JAMB 1 1/2"=1'-0"

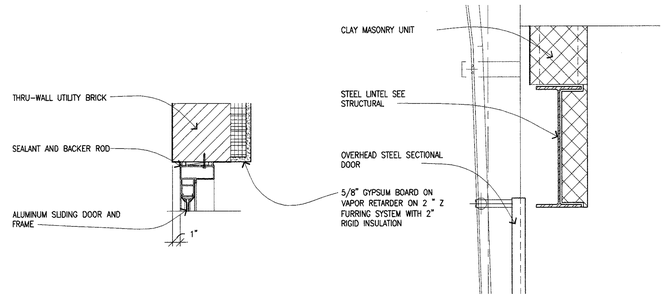

8 A102 HEAD 1 1/2"=1'-0"

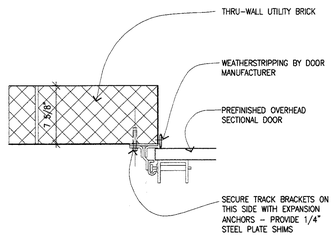

7 A102 JAMB 1 1/2"=1'-0"

211

15 A102 JAMB 1 1/2"=1'-0"

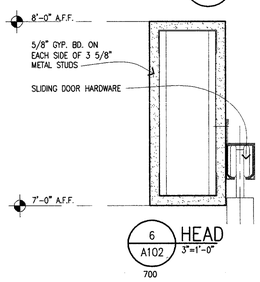

6 A102 HEAD 3"=1'-0"

700

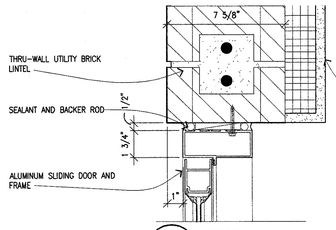

3 A102 HEAD 3"=1'-0"

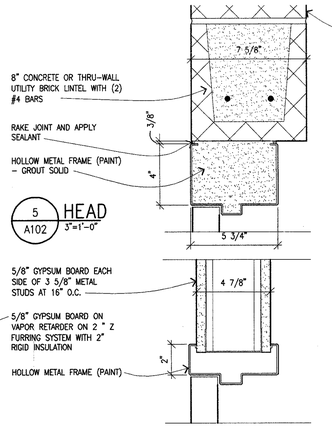

5 A102 HEAD 3"=1'-0"

2 A102 HEAD 3"=1'-0"

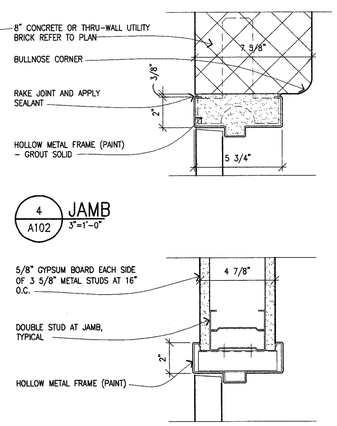

4 A102 JAMB 3"=1'-0"

1 A102 JAMB 3"=1'-0"

NEUMANN SMITH & ASSOCIATES

Architecture
Planning
Interior Design

400 Galleria Officentre
Suite 555
Southfield, Michigan 48034

248-352-8310
FAX 248-352-1821
NS@neumannsmith.com

Metro Lofts

Royal Oak, Michigan

Revisions

STATE OF MICHIGAN – REGISTERED ARCHITECT

MAY 28, 2004 – ISSUED FOR BIDS
MAY 13, 2004 – ISSUED FOR MASONRY PRICING

Date
Drawn
MGD
Checked
MGD
Approved
PTM
Bidpak Number

☐ Preliminary
■ Construction
☐ Record

Do not scale
Use figured dimensions only
Copyright © 2001

Job Number
23091

Title
Door Schedule

Scale: As Noted

Sheet
A102

F:\23093\23091 - Metro Lofts\SD-Construction Documents\23091A102.dwg, 5/28/2004 4:22:21 PM, pat, Xerox 510dp scanner.pc3, 1:1, Neumann/Smith & Assoc.

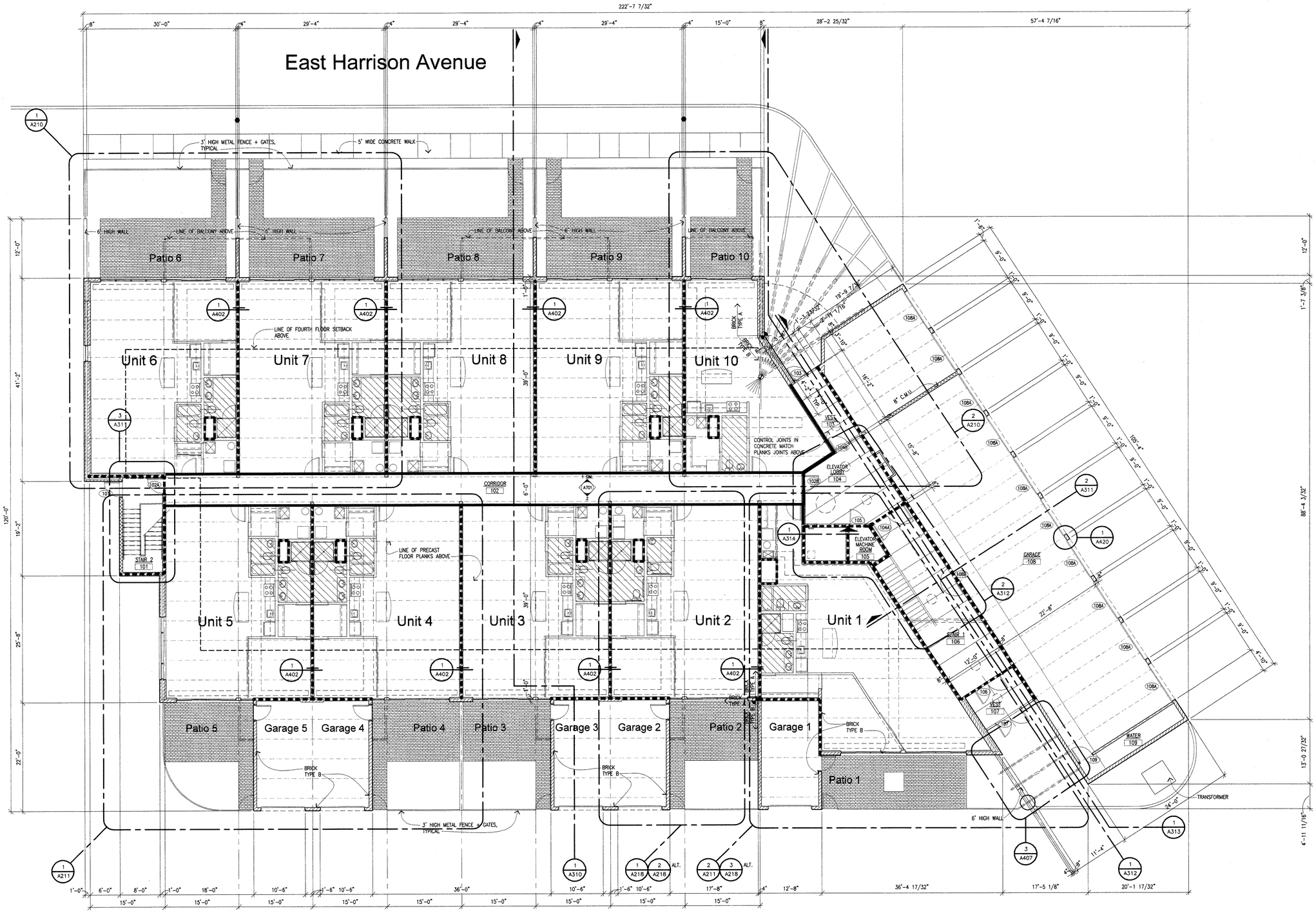

1 FIRST FLOOR PLAN
1/8" = 1'-0"

LEGEND
1/2 HR. REQUIRED; 1 HR. PROVIDED
1 HR. REQUIRED; 1 HR. MIN. PROVIDED

BRICK TYPE NOTE
REFER TO ELEVATIONS FOR ADDITIONAL INFORMATION REGARDING BRICK TYPE LOCATIONS

NEUMANN SMITH & ASSOCIATES

Architecture
Planning
Interior Design

400 Galleria Officentre
Suite 555
Southfield, Michigan 48034

248-352-8310
FAX 248-352-1821
NS@neumannsmith.com

Metro Lofts
Royal Oak, Michigan

Revisions

MAY 28, 2004 – ISSUED FOR BIDS

MAY 21, 2004 – ISSUED FOR FOUNDATIONS (FOR REFERENCE ONLY)

MAY 13, 2004 – ISSUED FOR MASONRY PRICING

Date: 3-17-2004
Drawn: PTM
Checked: MGD
Approved: PTM
Bidpak Number

☐ Preliminary
■ Construction
☐ Record

Do not scale
Use figured dimensions only
Copyright © 2003

Job Number: 23091
Title: **First Floor Plan**

Scale: 1/8" = 1'-0"
Sheet: **A201**

F:\2003\23091 - Metro Lofts\30-Construction Documents\23091A201.dwg, 5/28/2004 4:22:01 PM, pat, Xerox 510dp-scanner.pc3, 1:1, Neumann/Smith & Assoc.

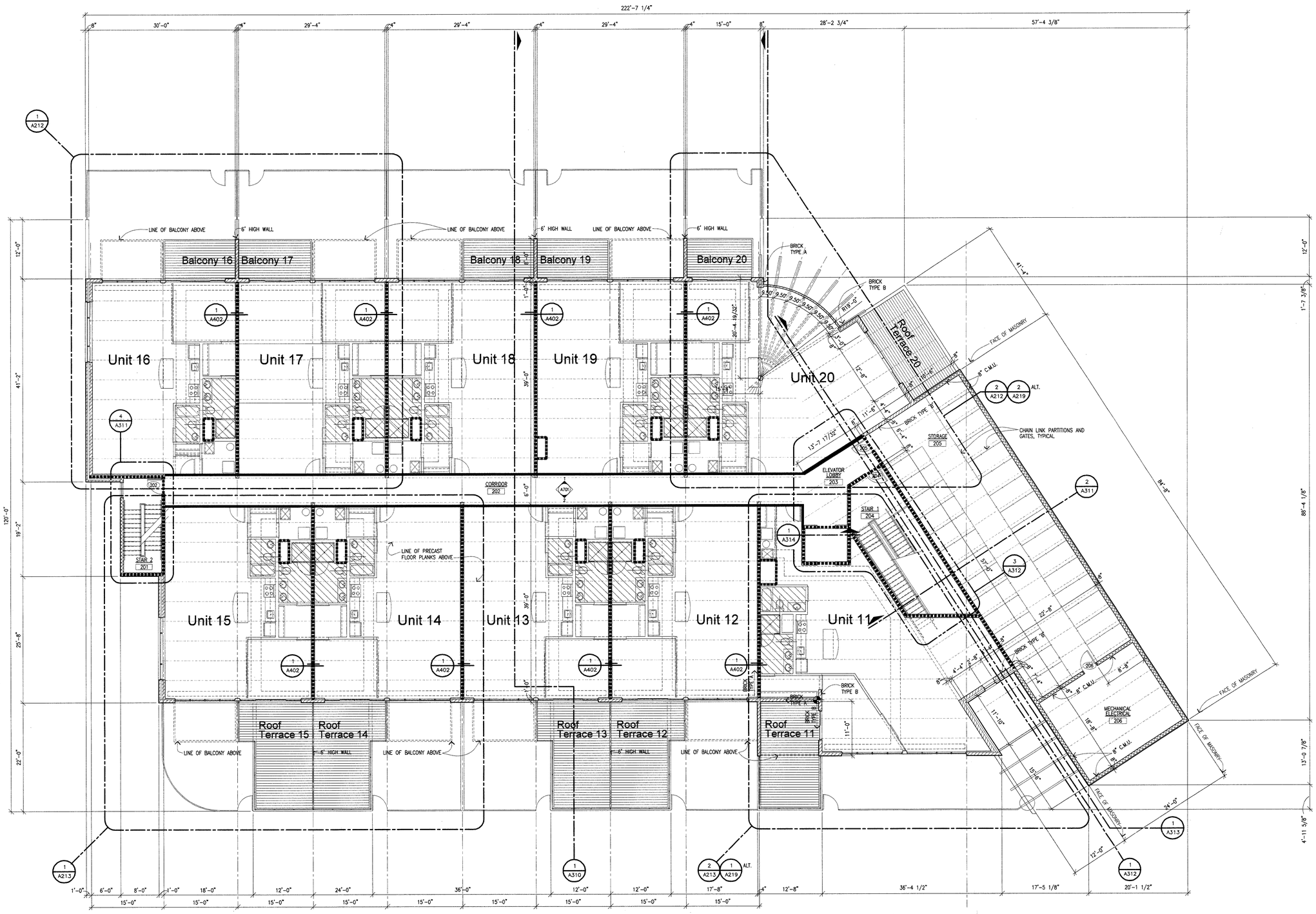

1 SECOND FLOOR PLAN
1/8" = 1'-0"

LEGEND	
———	1/2 HR. REQUIRED; 1 HR. PROVIDED
- - - - -	1 HR. REQUIRED; 1 HR. MIN. PROVIDED

BRICK TYPE NOTE
REFER TO ELEVATIONS FOR ADDITIONAL INFORMATION REGARDING BRICK TYPE LOCATIONS

NEUMANN SMITH & ASSOCIATES

Architecture
Planning
Interior Design

400 Galleria Officentre
Suite 555
Southfield, Michigan 48034

248-352-8310
FAX 248-352-1821
NS@neumannsmith.com

Metro Lofts
Royal Oak, Michigan

Revisions

STATE OF MICHIGAN — LICENSED ARCHITECT — MICHAEL LAWRENCE SMITH — ARCHITECT

MAY 28, 2004 – ISSUED FOR BIDS

MAY 21, 2004 – ISSUED FOR FOUNDATIONS (FOR REFERENCE ONLY)

MAY 13, 2004 – ISSUED FOR MASONRY PRICING

Date
3-17-2004
Drawn
PTM
Checked
MGD
Approved
PTM
Bidpak Number

☐ Preliminary
■ Construction
☐ Record

Do not scale
Use figured dimensions only
Copyright © 2003

Job Number
23091
Title
Second Floor Plan

Scale: 1/8" = 1'-0"
Sheet
A202

F:\2003\23091 - Metro Lofts\30-Construction Documents\23091A202.dwg, 6/1/2004 9:10:04 AM, pat_Xerox 5100ps-scanner.pc3, 1:1, Neumann/Smith & Assoc.

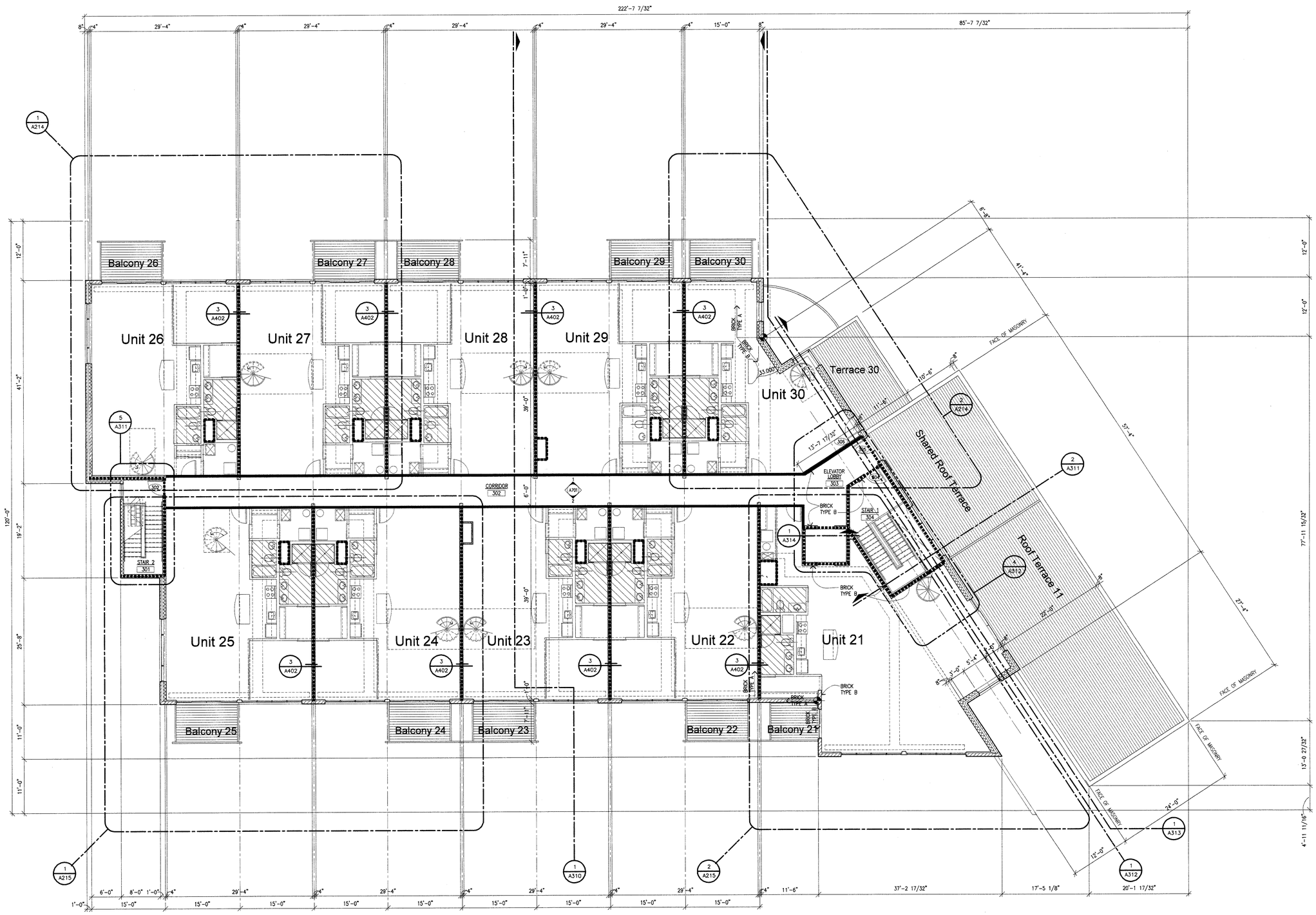

1 THIRD FLOOR PLAN
1/8" = 1'-0"

LEGEND	
———	1/2 HR. REQUIRED; 1 HR. PROVIDED
- - - - -	1 HR. REQUIRED; 1 HR. MIN. PROVIDED

SPIRAL STAIR NOTES

PREMANUFACTURED 5'-0" DIAMETER SPIRAL STAIR - CHECKERED STEEL PLATE TYPE TREAD WITH A 7.5" MIN CLEAR TREAD DEPTH @ A POINT 12" FROM THE NARROW EDGE. 78" MINIMUM HEADCLEARANCE. 18 RISERS @ 8" - 36" TALL HANDRAIL ASSEMBLY WITH 3/4" DIAMETER STEEL BALUSTERS @ 4" O.C. MAX. TYPICAL SPIRAL STAIR BETWEEN LEVEL 3 AND 4

BRICK TYPE NOTE

REFER TO ELEVATIONS FOR ADDITIONAL INFORMATION REGARDING BRICK TYPE LOCATIONS

NEUMANN SMITH & ASSOCIATES

Architecture
Planning
Interior Design

400 Galleria Officentre
Suite 555
Southfield, Michigan 48034

248-352-8310
FAX 248-352-1821
NS@neumannsmith.com

Metro Lofts
Royal Oak, Michigan

Revisions

JOEL LAWRENCE NEUMANN ARCHITECT REGISTERED ARCHITECT STATE OF MICHIGAN

MAY 28, 2004 - ISSUED FOR BIDS

MAY 21, 2004 - ISSUED FOR FOUNDATIONS (FOR REFERENCE ONLY)

MAY 13, 2004 - ISSUED FOR MASONRY PRICING

Date
3-17-2004
Drawn
PTM
Checked
MGD
Approved
PTM
Bidpak Number

☐ Preliminary
■ Construction
☐ Record

Do not scale
Use figured dimensions only
Copyright © 2003

Job Number
23091
Title
Third Floor Plan

Scale: 1/8" = 1'-0"
Sheet
A203

F:\2003\23091 - Metro Lofts\3D-Construction Documents\23091A203.dwg, 5/28/2004 4:21:14 PM, pat, Xerox 5100p scanner.pc3, 1:1, NeumannSmith & Assoc.

NEUMANN SMITH & ASSOCIATES

Architecture
Planning
Interior Design

400 Galleria Officentre
Suite 555
Southfield, Michigan 48034

248-352-8310
FAX 248-352-1821
NS@neumannsmith.com

Metro Lofts

Royal Oak, Michigan

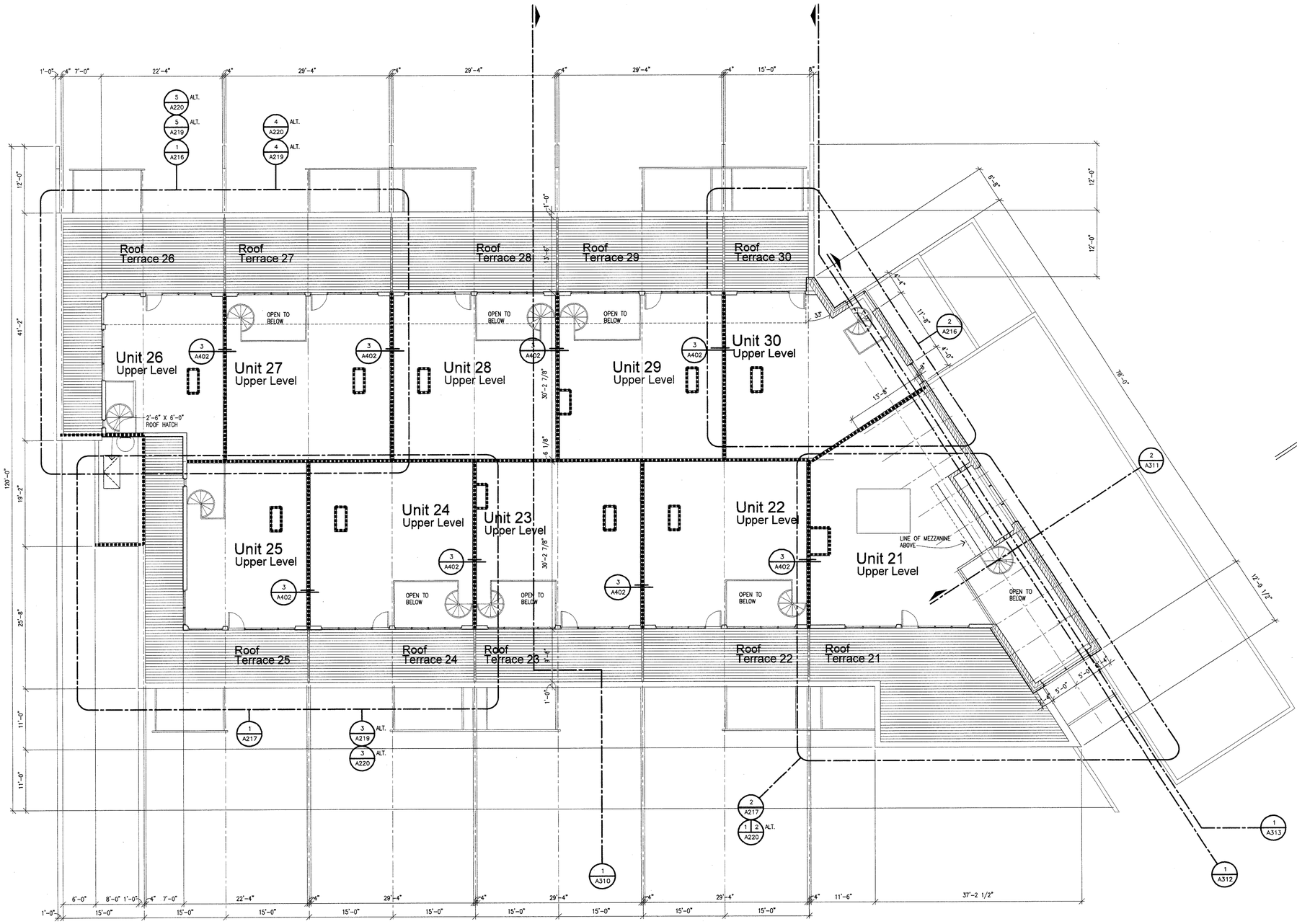

1 FOURTH FLOOR PLAN
1/8" = 1'-0"

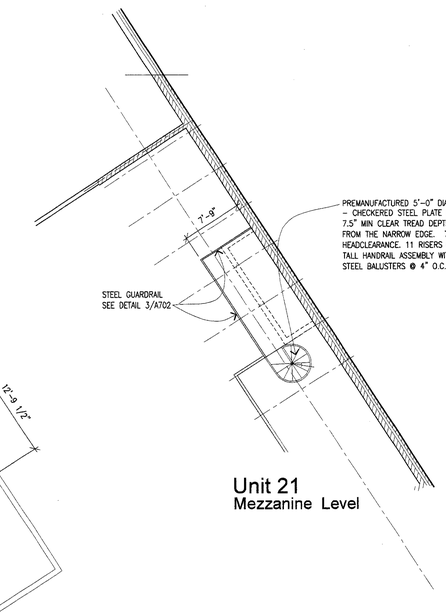

2 MEZZANINE PLAN
1/8" = 1'-0"

LEGEND	
———	1/2 HR. REQUIRED; 1 HR. PROVIDED
- - - - -	1 HR. REQUIRED; 1 HR. MIN. PROVIDED

SPIRAL STAIR NOTES

PREMANUFACTURED 5'-0" DIAMETER SPIRAL STAIR – CHECKERED STEEL PLATE TYPE TREAD WITH A 7.5" MIN CLEAR TREAD DEPTH @ A POINT 12" FROM THE NARROW EDGE. 78" MINIMUM HEADCLEARANCE. 18 RISERS @ 8" – 36" TALL HANDRAIL ASSEMBLY WITH 3/4" DIAMETER STEEL BALUSTERS @ 4" O.C. MAX. TYPICAL SPIRAL STAIR BETWEEN LEVEL 3 AND 4

Revisions

MAY 28, 2004 – ISSUED FOR BIDS

MAY 21, 2004 – ISSUED FOR FOUNDATIONS (FOR REFERENCE ONLY)

MAY 13, 2004 – ISSUED FOR MASONRY PRICING

Date
3-17-2004
Drawn
PTM
Checked
MGD
Approved
PTM
Bidpak Number

☐ Preliminary
■ Construction
☐ Record

Do not scale
Use figured dimensions only
Copyright © 2003

Job Number
23091
Title
Fourth Floor Plan

Scale: 1/8" = 1'-0"
Sheet
A204

F:\2003\23091 - Metro Lofts\3D-Construction Documents\23091A204.dwg, 5/28/2004 4:20:56 PM, pat, Xerox 5100p-scanner pc3, 1:1, Neumann/Smith & Assoc.

NOTE:

TERRACE DECKING NOT SHOWN FOR CLARITY. REFER TO SECOND, THIRD AND FOURTH FLOOR PLANS FOR EXTENT OF ROOF TERRACE DECKING.

SHADED AREAS DENOTE TAPERED INSULATION

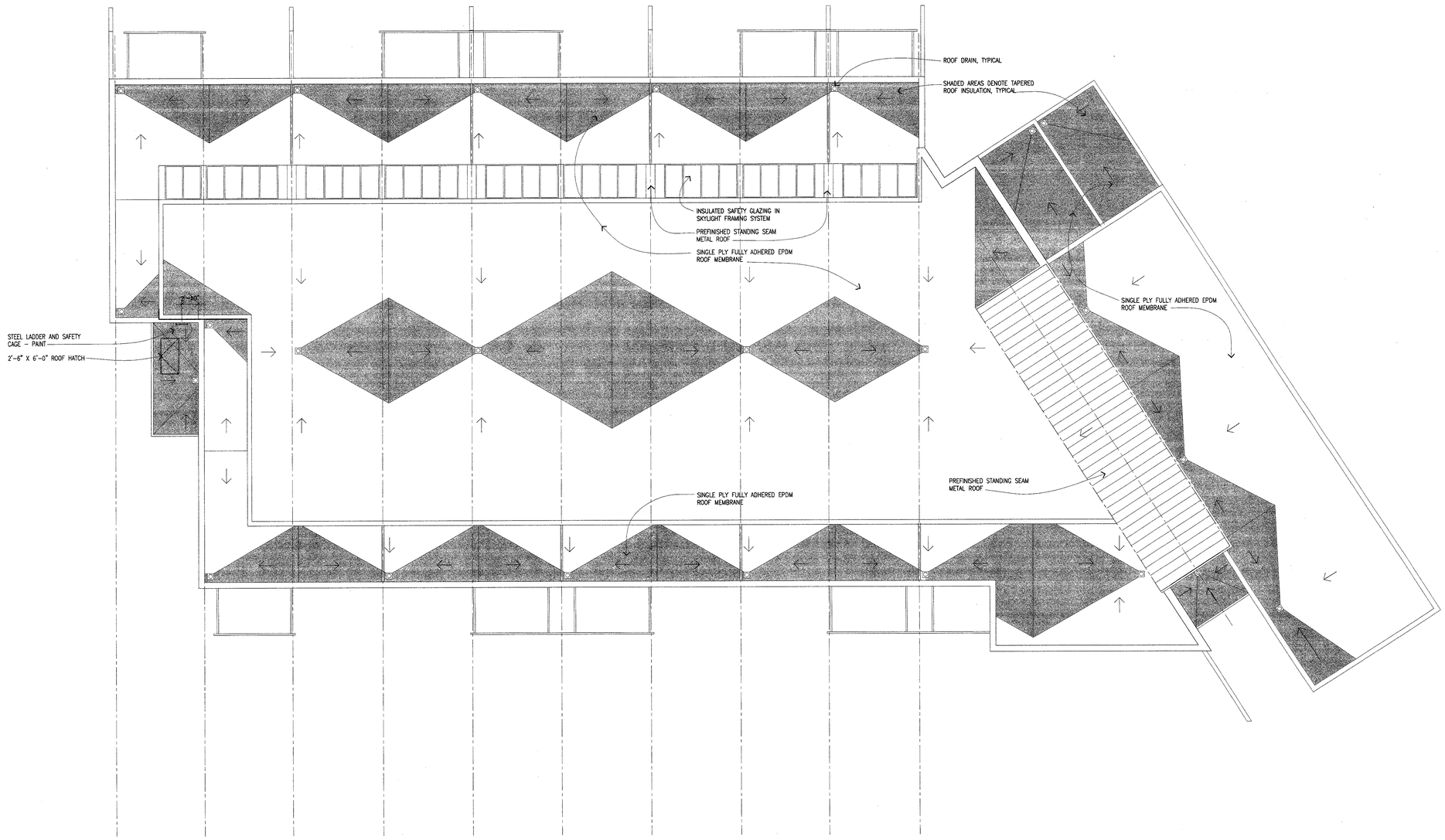

1 ROOF PLAN
1/8" = 1'-0"

NEUMANN SMITH & ASSOCIATES

Architecture
Planning
Interior Design

400 Galleria Officentre
Suite 555
Southfield, Michigan 48034

248-352-8310
FAX 248-352-1821
NS@neumannsmith.com

Metro Lofts
Royal Oak, Michigan

Revisions

STATE OF MICHIGAN REGISTERED ARCHITECT

MAY 28, 2004 - ISSUED FOR BIDS

MAY 21, 2004 - ISSUED FOR FOUNDATIONS (FOR REFERENCE ONLY)

MAY 13, 2004 - ISSUED FOR MASONRY PRICING

Date
4-13-2004
Drawn
PTM
Checked
MGD
Approved
PTM
Bidpak Number

☐ Preliminary
■ Construction
☐ Record

Do not scale
Use figured dimensions only
Copyright © 2003

Job Number
23091
Title
Roof Plan

Scale: 1/8" = 1'-0"
Sheet
A205

F:\2003\23091 - Metro Lofts\35-Construction Documents\23091A205.dwg, 5/28/2004 4:20:39 PM, pat_Xerox 5104p scanner.pc3, 1:1, Neumann/Smith & Assoc.

PARTITION LEGEND

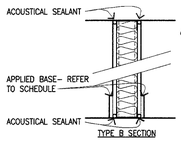

A — 8"
NOMINAL 8" WIDE BRICK MASONRY
4 HOUR FIRE RESISTANCE RATING AS CALCULATED BY SECTION 720.4.1.1 OF THE MICHIGAN BUILDING CODE

EQUATION 7–8 Te = V/LH
VOLUME (V) OF CLAY MASONRY UNIT = 215.3 CU. IN.
LENGTH (L) OF CLAY MASONRY UNIT = 11.625 IN.
HEIGHT (H) OF CLAY MASONRY UNIT = 3.625
EQUIVALENT THICKNESS (Te) = 215.3/(11.625)(3.625) = 5.11 INCHES

5.0 INCHES = 4 HOUR FIRE RESISTANCE RATING (TABLE 720.4.1(1))

B — 4 7/8"
CORRIDOR WALL – 1 HOUR RATING – U.L. # U 419, U 465 – 5/8" GYPSUM BOARD EACH SIDE OF 3 5/8" 25 GA. METAL STUDS AT 24" O.C. WITH 3" SOUND ATTENUATION INSULATION. ALL PENETRATIONS TO BE ACOUSTICALLY SEALED– TYP.

C — 4 7/8"
5/8" GYPSUM BOARD EACH SIDE OF 3 5/8" 25 GA. METAL STUDS AT 24" O.C.

D — 3 1/2"
SHAFT ENCLOSURE WALL – 2 HOUR RATING U.L. # U 438, U 467
2 LAYERS 1/2" TYPE 'X' GYPSUM BOARD + 1 LAYER 1" GYPSUM BOARD LINER PANEL ON STEEL C–H STUDS AT 24" O.C.

E.1 / E — 7 1/4"
5/8" GYPSUM BOARD EACH SIDE OF 6" 25 GA. METAL STUDS AT 24" O.C.

E.1 – 1 HOUR RATED UL #U419

F — 4 1/4"
(1) LAYER 5/8" GYPSUM BOARD ONE SIDE OF 3 5/8" 25 GA. METAL STUDS AT 24" O.C.

G — 6 5/8"
(1) LAYER 5/8" GYPSUM BOARD ONE SIDE OF 3 5/8" 25 GA. METAL STUDS AT 24" O.C.

H — 8"
CONCRETE MASONRY UNITS. NOMINAL WIDTH 8". ACTUAL WIDTH 7 5/8". 2 HOUR RATING – U.L. # U 905

J — 6 1/8"
DWELLING UNIT SEPARATION – 1 HOUR RATING REQUIRED, 2 HOUR PROVIDED – U.L. # U 493 – 2 LAYERS 5/8" GYPSUM BOARD EACH SIDE OF 3 5/8" 25 GA. METAL STUDS AT 24" O.C. WITH 3" SOUND ATTENUATION INSULATION. ALL PENETRATIONS TO BE ACOUSTICALLY SEALED– TYP.

NOTE: ALL PARTITIONS SHOWN SHADED OR HATCHED SHALL EXTEND FROM TOP OF SLAB TO UNDERSIDE OF SLAB ABOVE. TOP OF PARTITIONS NOT SHOWN HATCHED SHALL BE 8'–0" ABOVE FINISH FLOOR WITH TOP OF PARTITION FINISHED WITH (1) LAYER OF GYPSUM BOARD.

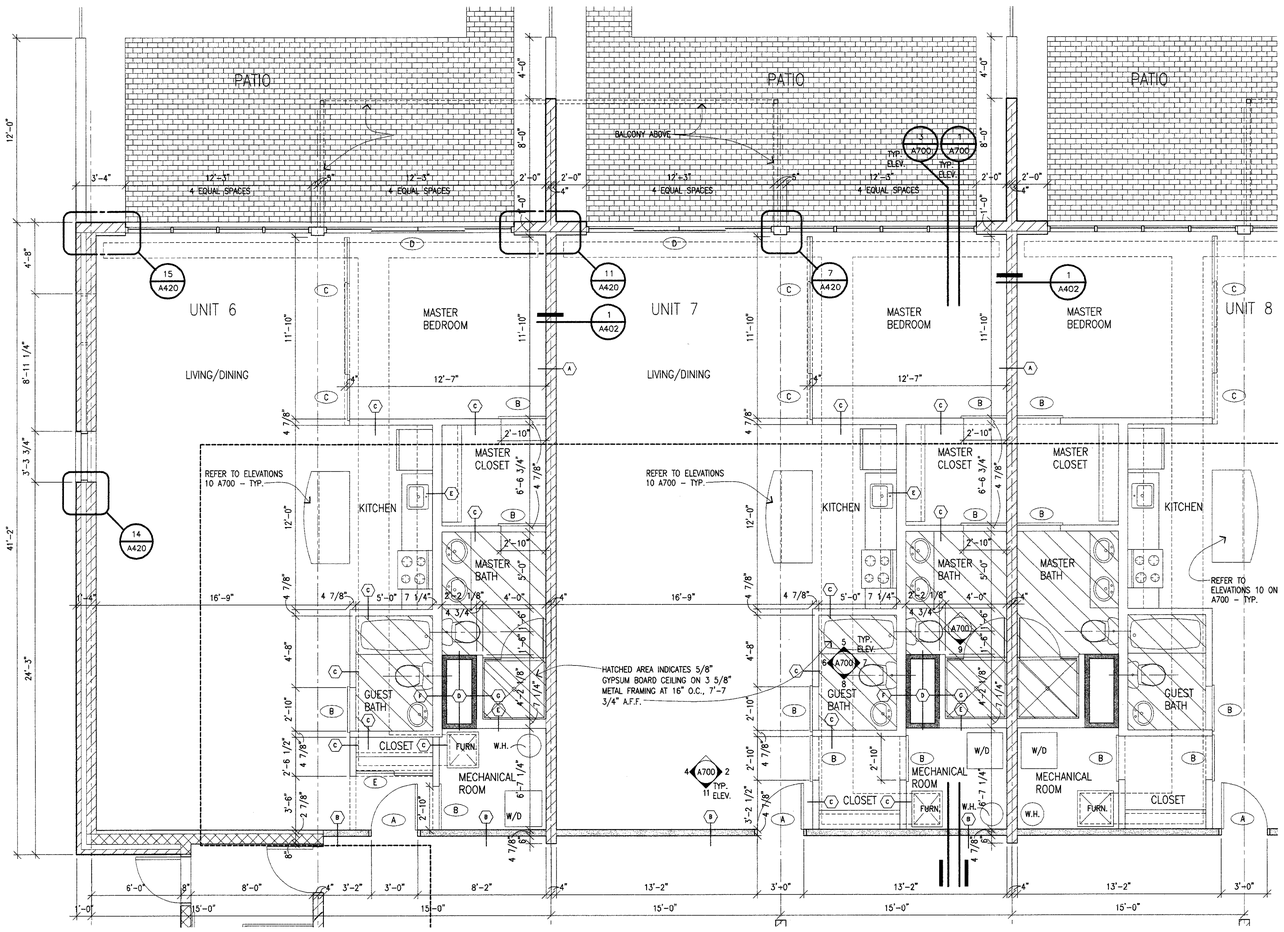

1 / A201 FIRST FLOOR ENLARGED FLOOR PLAN
1/4"=1'–0"

UNIT 7 LAYOUT

TYPICAL LAYOUT FOR UNITS 7, 9
LAYOUT OPPOSITE FOR UNIT 8

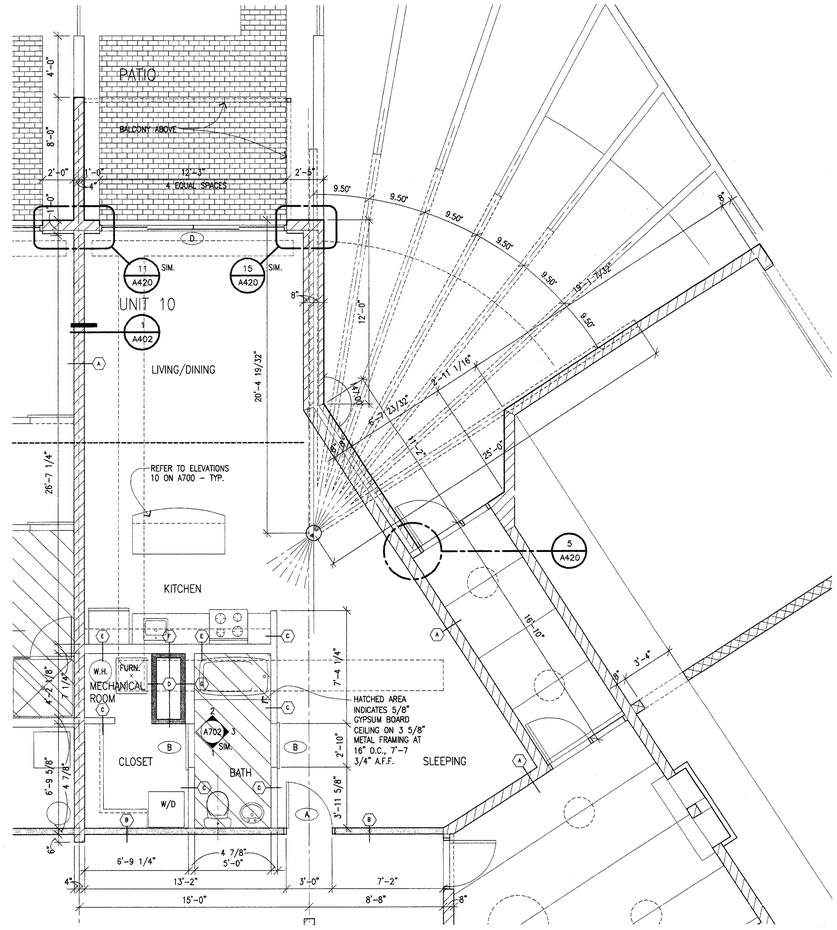

2 / A201 FIRST FLOOR ENLARGED FLOOR PLAN
1/4"=1'–0"

NEUMANN SMITH & ASSOCIATES

Architecture
Planning
Interior Design

400 Galleria Officentre
Suite 555
Southfield, Michigan 48034

248-352-8310
FAX 248-352-1821
NS@neumannsmith.com

Metro Lofts
Royal Oak, Michigan

Revisions

STATE OF MICHIGAN — JOHN PAUL NEUMANN — REGISTERED ARCHITECT

MAY 28, 2004 – ISSUED FOR BIDS
MAY 13, 2004 – ISSUED FOR MASONRY PRICING

Date: 4-14-2004
Drawn: PTM
Checked: MGD
Approved: PTM
Bidpak Number:

☐ Preliminary
■ Construction
☐ Record

Do not scale
Use figured dimensions only
Copyright © 2003

Job Number: **23091**
Title: **Enlarged Unit Plans**

Scale: 1/4" = 1'-0"
Sheet: **A210**

F:\2003\23091 - Metro Lofts\00-Construction Documents\23091A210.dwg, 5/28/2004 4:20:20 PM, pat, Xerox 510dp scanner.pc3, 1:1, Neumann/Smith & Assoc.

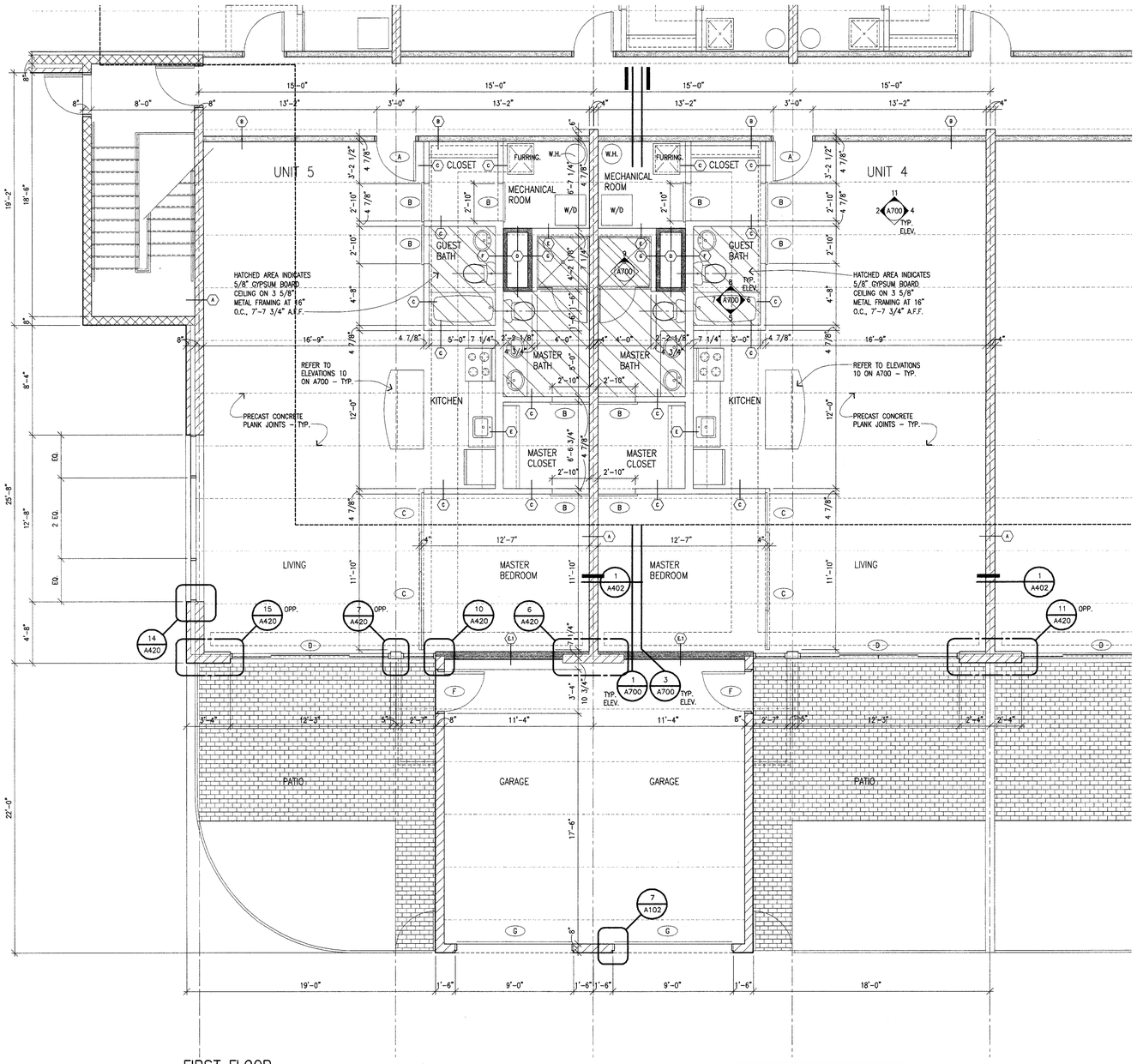

1 A201 FIRST FLOOR ENLARGED FLOOR PLAN
1/4"=1'-0"

UNIT 4 LAYOUT
TYPICAL LAYOUT FOR UNITS 4 LAYOUT OPPOSITE FOR UNIT 3

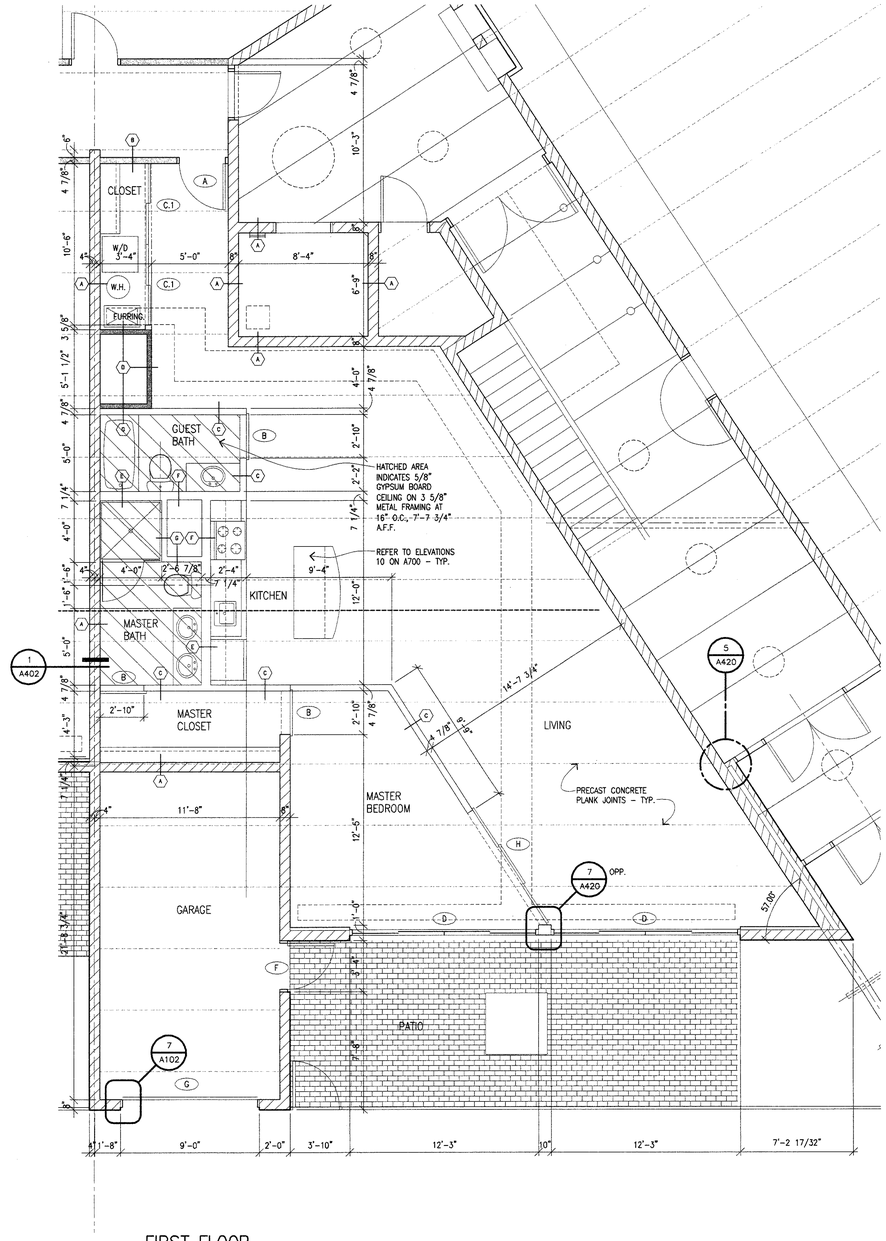

2 A201 FIRST FLOOR ENLARGED FLOOR PLAN
1/4"=1'-0"

PARTITION LEGEND

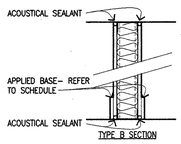

A 8" — NOMINAL 8" WIDE BRICK MASONRY
4 HOUR FIRE RESISTANCE RATING AS CALCULATED BY SECTION 720.4.1.1 OF THE MICHIGAN BUILDING CODE

EQUATION 7–8 Te = V/LH
VOLUME (V) OF CLAY MASONRY UNIT = 215.3 CU. IN.
LENGTH (L) OF CLAY MASONRY UNIT = 11.625 IN.
HEIGHT (H) OF CLAY MASONRY UNIT = 3.625
EQUIVALENT THICKNESS (Te) = 215.3/(11.625)(3.625) = 5.11 INCHES

5.0 INCHES = 4 HOUR FIRE RESISTANCE RATING (TABLE 720.4.1(1))

B 4 7/8" — CORRIDOR WALL – 1 HOUR RATING – U.L. # U 419, U 465 – 5/8" GYPSUM BOARD EACH SIDE OF 3 5/8" 25 GA. METAL STUDS AT 24" O.C. WITH 3" SOUND ATTENUATION INSULATION. ALL PENETRATIONS TO BE ACOUSTICALLY SEALED– TYP.

C 4 7/8" — 5/8" GYPSUM BOARD EACH SIDE OF 3 5/8" 25 GA. METAL STUDS AT 24" O.C.

D 3 1/2" — SHAFT ENCLOSURE WALL – 2 HOUR RATING U.L. # U 438, U 467
2 LAYERS 1/2" TYPE 'X' GYPSUM BOARD + 1 LAYER 1" GYPSUM BOARD LINER PANEL ON STEEL C–H STUDS AT 24" O.C.

E 7 1/4" — 5/8" GYPSUM BOARD EACH SIDE OF 6" 25 GA. METAL STUDS AT 24" O.C.

E.1 — E.1 – 1 HOUR RATED UL #U419

F 4 1/4" — (1) LAYER 5/8" GYPSUM BOARD ONE SIDE OF 3 5/8" 25 GA. METAL STUDS AT 24" O.C.

G 6 5/8" — (1) LAYER 5/8" GYPSUM BOARD ONE SIDE OF 3 5/8" 25 GA. METAL STUDS AT 24" O.C.

H 8" — CONCRETE MASONRY UNITS. NOMINAL WIDTH 8". ACTUAL WIDTH 7 5/8". 2 HOUR RATING – U.L. # U 905

J 6 1/8" — DWELLING UNIT SEPARATION – 1 HOUR RATING REQUIRED, 2 HOUR PROVIDED – U.L. # U 493 – 2 LAYERS 5/8" GYPSUM BOARD EACH SIDE OF 3 5/8" 25 GA. METAL STUDS AT 24" O.C. WITH 3" SOUND ATTENUATION INSULATION. ALL PENETRATIONS TO BE ACOUSTICALLY SEALED– TYP.

NOTE: ALL PARTITIONS SHOWN SHADED OR HATCHED SHALL EXTEND FROM TOP OF SLAB TO UNDERSIDE OF SLAB ABOVE. TOP OF PARTITIONS NOT SHOWN HATCHED SHALL BE 8'–0" ABOVE FINISH FLOOR WITH TOP OF PARTITION FINISHED WITH (1) LAYER OF GYPSUM BOARD.

NEUMANN SMITH & ASSOCIATES

Architecture
Planning
Interior Design

400 Galleria Officentre
Suite 555
Southfield, Michigan 48034

248-352-8310
FAX 248-352-1821
NS@neumannsmith.com

Metro Lofts
Royal Oak, Michigan

Revisions

STATE OF MICHIGAN LAWRENCE M. SMITH REGISTERED ARCHITECT

MAY 28, 2004 – ISSUED FOR BIDS
MAY 13, 2004 – ISSUED FOR MASONRY PRICING

Date **4-14-2004**
Drawn **PTM**
Checked **MGD**
Approved **PTM**
Bidpak Number

☐ Preliminary
■ Construction
☐ Record

Do not scale
Use figured dimensions only
Copyright © 2003

Job Number **23091**
Title **Enlarged Unit Plans**

Scale: 1/4" = 1'-0"
Sheet **A211**

F:\2003\23091 - Metro Lofts\05-Construction Documents\23091A211.dwg, 5/28/2004 4:20:02 PM, pat, Xerox 5100ps-scanner.pc3, 1:1, Neumann/Smith & Assoc.

PARTITION LEGEND

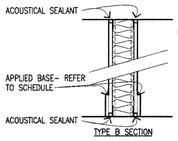

A — 8"
NOMINAL 8" WIDE BRICK MASONRY
4 HOUR FIRE RESISTANCE RATING AS CALCULATED BY SECTION 720.4.1.1 OF THE MICHIGAN BUILDING CODE

EQUATION 7-8 Te = V/LH
VOLUME (V) OF CLAY MASONRY UNIT = 215.3 CU. IN.
LENGTH (L) OF CLAY MASONRY UNIT = 11.625 IN.
HEIGHT (H) OF CLAY MASONRY UNIT = 3.625
EQUIVALENT THICKNESS (Te) = 215.3/(11.625)(3.625) = 5.11 INCHES

5.0 INCHES = 4 HOUR FIRE RESISTANCE RATING (TABLE 720.4.1(1))

B — 4 7/8"
CORRIDOR WALL – 1 HOUR RATING – U.L. # U 419, U 465 – 5/8" GYPSUM BOARD EACH SIDE OF 3 5/8" 25 GA. METAL STUDS AT 24" O.C. WITH 3" SOUND ATTENUATION INSULATION. ALL PENETRATIONS TO BE ACOUSTICALLY SEALED– TYP.

C — 4 7/8"
5/8" GYPSUM BOARD EACH SIDE OF 3 5/8" 25 GA. METAL STUDS AT 24" O.C.

D — 3 1/2"
SHAFT ENCLOSURE WALL – 2 HOUR RATING U.L. # U 438, U 467
2 LAYERS 1/2" TYPE 'X' GYPSUM BOARD + 1 LAYER 1" GYPSUM BOARD LINER PANEL ON STEEL C–H STUDS AT 24" O.C.

E.1 / E — 7 1/4"
5/8" GYPSUM BOARD EACH SIDE OF 6" 25 GA. METAL STUDS AT 24" O.C.
E.1 – 1 HOUR RATED UL #U419

F — 4 1/4"
(1) LAYER 5/8" GYPSUM BOARD ONE SIDE OF 3 5/8" 25 GA. METAL STUDS AT 24" O.C.

G — 6 5/8"
(1) LAYER 5/8" GYPSUM BOARD ONE SIDE OF 3 5/8" 25 GA. METAL STUDS AT 24" O.C.

H — 8"
CONCRETE MASONRY UNITS. NOMINAL WIDTH 8". ACTUAL WIDTH 7 5/8". 2 HOUR RATING – U.L. # U 905

J — 6 1/8"
DWELLING UNIT SEPARATION – 1 HOUR RATING REQUIRED, 2 HOUR PROVIDED – U.L. # U 493 – 2 LAYERS 5/8" GYPSUM BOARD EACH SIDE OF 3 5/8" 25 GA. METAL STUDS AT 24" O.C. WITH 3" SOUND ATTENUATION INSULATION. ALL PENETRATIONS TO BE ACOUSTICALLY SEALED– TYP.

NOTE: ALL PARTITIONS SHOWN SHADED OR HATCHED SHALL EXTEND FROM TOP OF SLAB TO UNDERSIDE OF SLAB ABOVE. TOP OF PARTITIONS NOT SHOWN HATCHED SHALL BE 8'–0" ABOVE FINISH FLOOR WITH TOP OF PARTITION FINISHED WITH (1) LAYER OF GYPSUM BOARD.

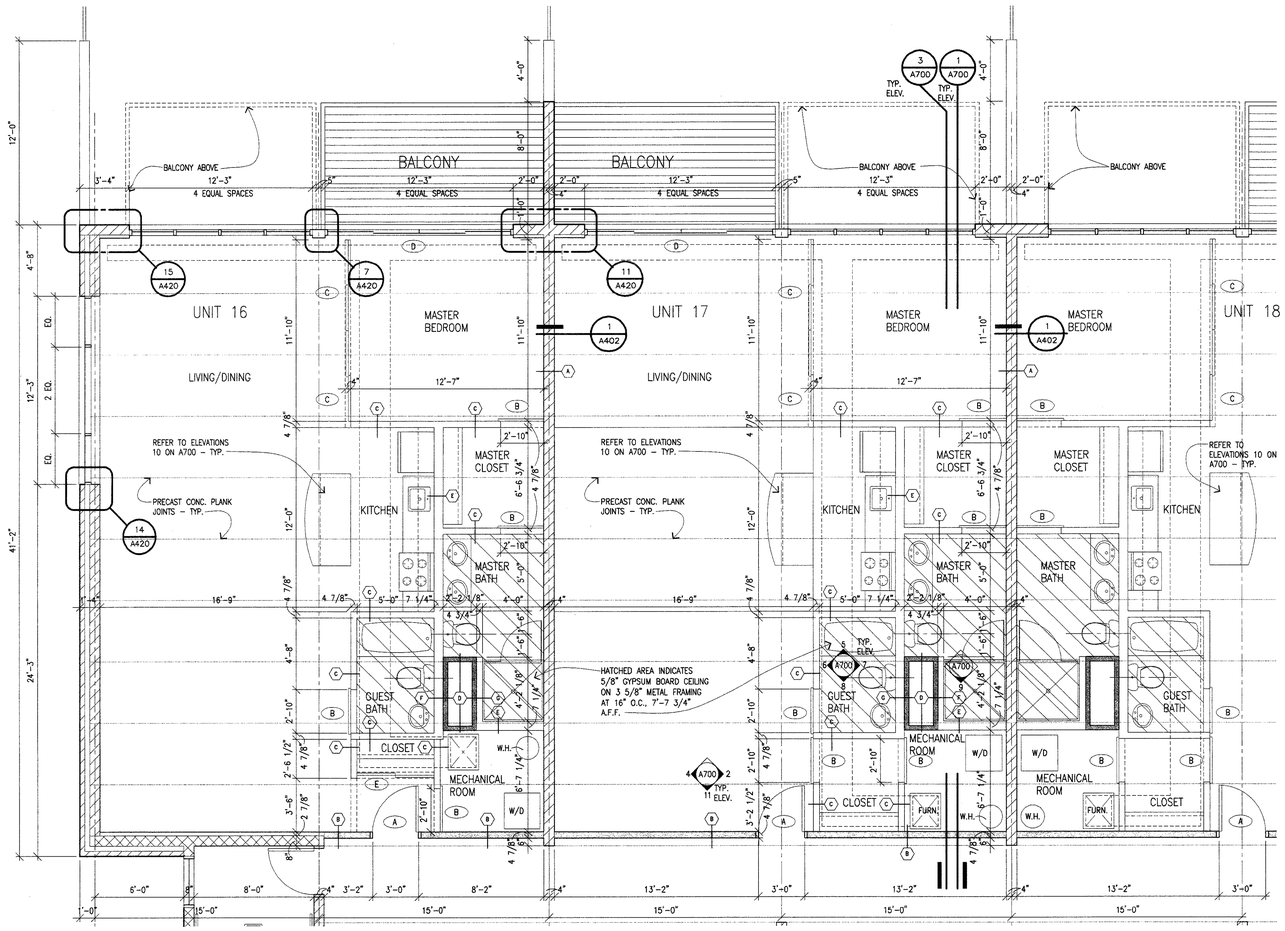

1 A202 SECOND FLOOR ENLARGED FLOOR PLAN
1/4"=1'–0"

UNIT 17 LAYOUT

TYPICAL LAYOUT FOR UNITS 17, 19
LAYOUT OPPOSITE FOR UNIT 18

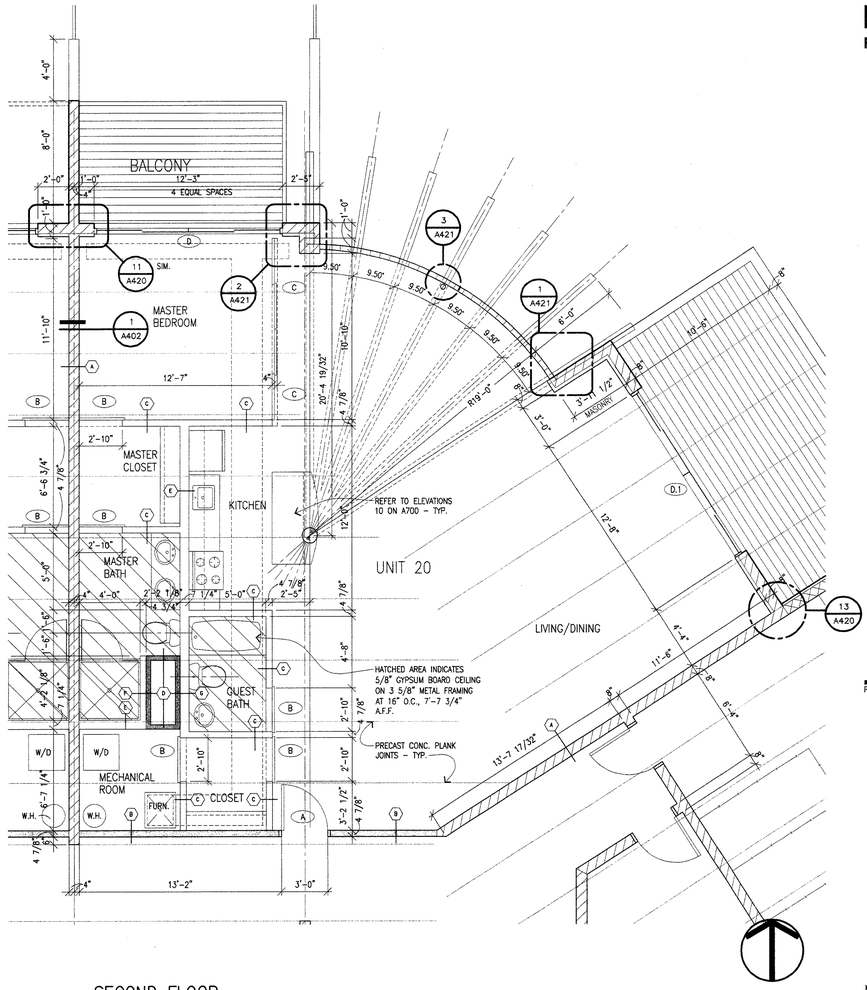

2 A202 SECOND FLOOR ENLARGED FLOOR PLAN
1/4"=1'–0"

NEUMANN SMITH & ASSOCIATES

Architecture
Planning
Interior Design

400 Galleria Officentre
Suite 555
Southfield, Michigan 48034

248-352-8310
FAX 248-352-1821
NS@neumannsmith.com

Metro Lofts
Royal Oak, Michigan

Revisions

STATE OF MICHIGAN — LAWRENCE E. SMITH — LICENSED ARCHITECT

MAY 28, 2004 – ISSUED FOR BIDS
MAY 13, 2004 – ISSUED FOR MASONRY PRICING

Date **4-14-2004**
Drawn **PTM**
Checked **MGD**
Approved **PTM**
Bidpak Number

☐ Preliminary ■ Construction ☐ Record

Do not scale
Use figured dimensions only
Copyright © 2003

Job Number **23091**
Title **Enlarged Unit Plans**

Scale: 1/4" = 1'-0"
Sheet **A212**

F:\2003\23091 - Metro Lofts\Sb-Construction Documents\23091A212.dwg, 9/28/2004 4:19:43 PM, pat, Xerox 5104dp-scanner.pc3, 1:1, Neumann/Smith & Assoc.

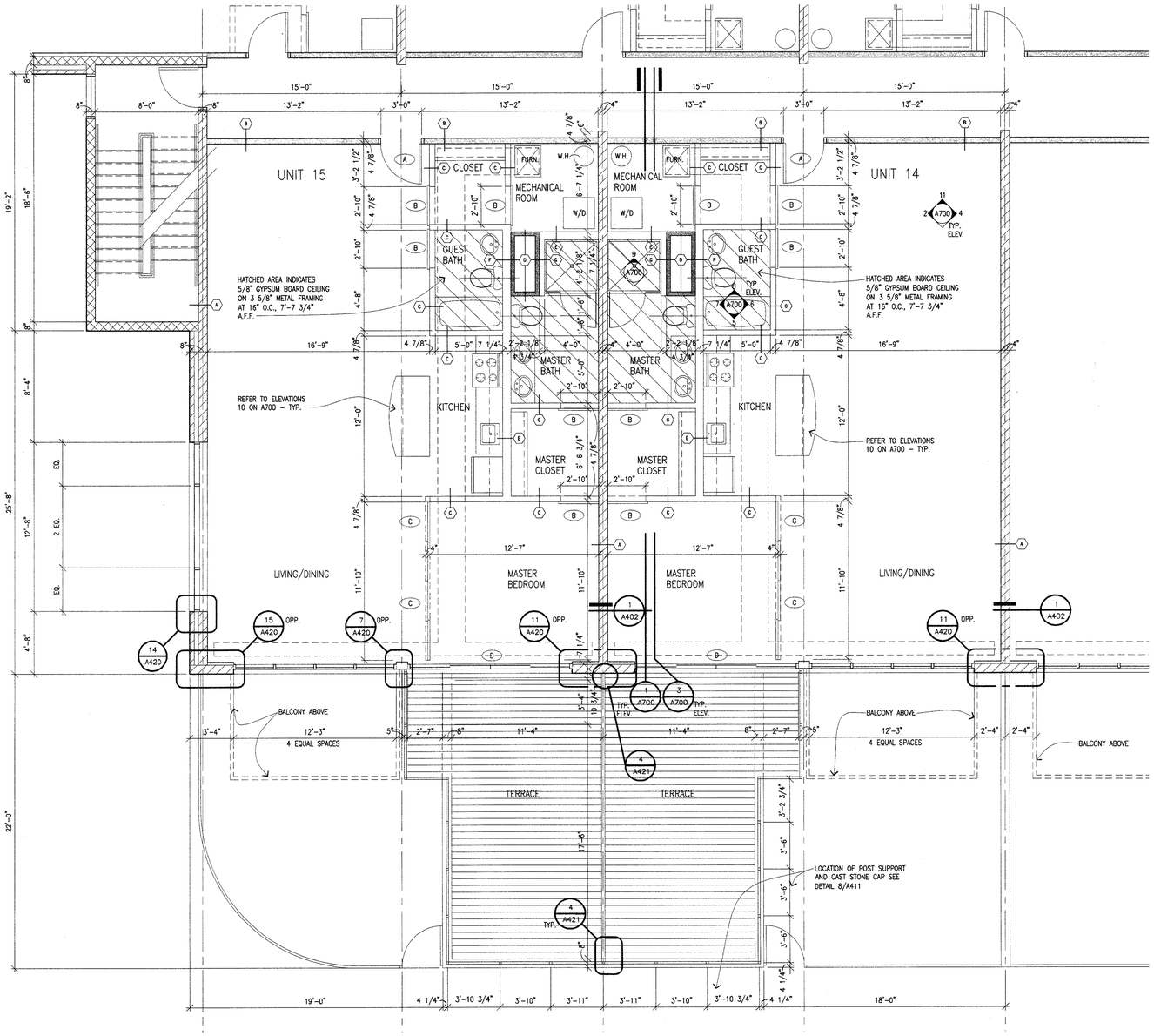

1 A202 SECOND FLOOR ENLARGED FLOOR PLAN
1/4"=1'-0"

UNIT 14 LAYOUT
TYPICAL LAYOUT FOR UNITS 14, 12 LAYOUT OPPOSITE FOR UNIT 13

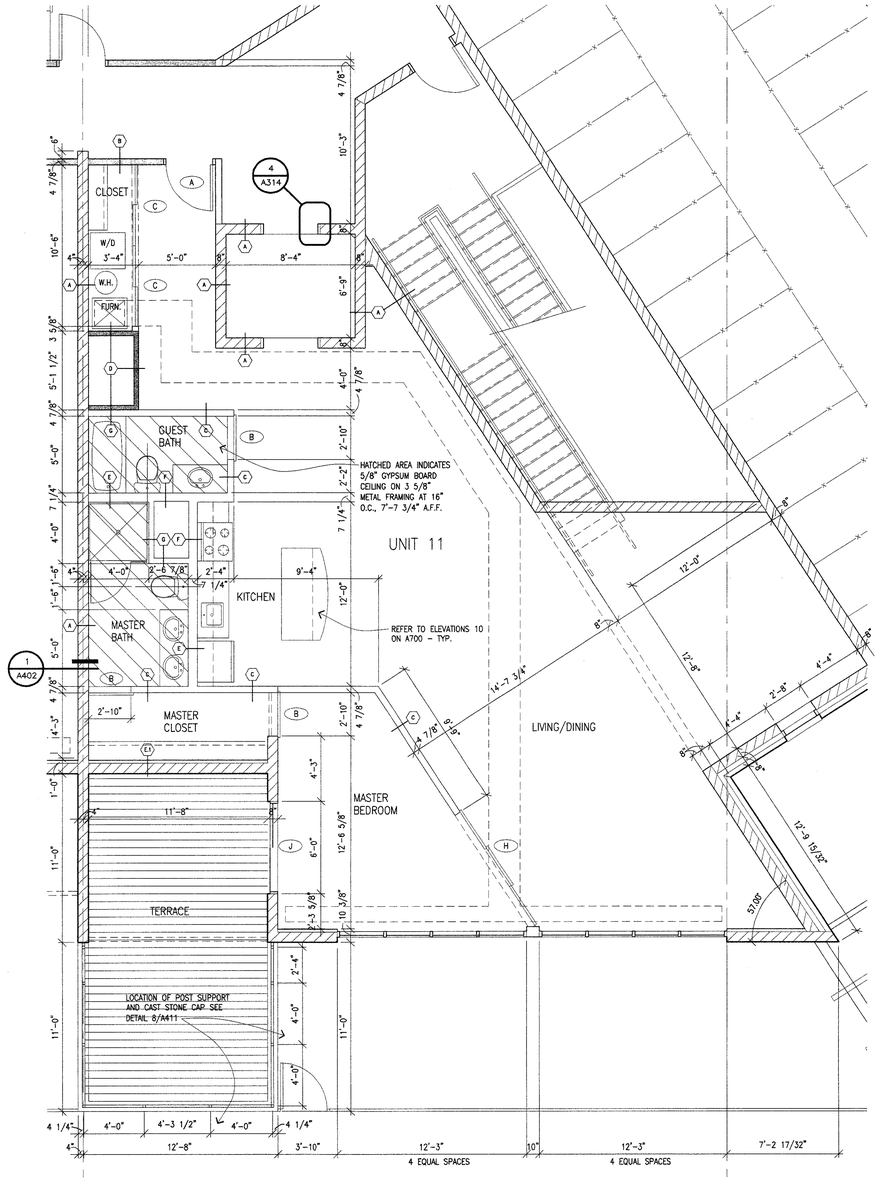

2 A202 SECOND FLOOR ENLARGED FLOOR PLAN
1/4"=1'-0"

PARTITION LEGEND

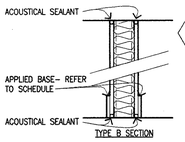

A — 8" — NOMINAL 8" WIDE BRICK MASONRY
4 HOUR FIRE RESISTANCE RATING AS CALCULATED BY SECTION 720.4.1.1 OF THE MICHIGAN BUILDING CODE

EQUATION 7-8 Te = V/LH
VOLUME (V) OF CLAY MASONRY UNIT = 215.3 CU. IN.
LENGTH (L) OF CLAY MASONRY UNIT = 11.625 IN.
HEIGHT (H) OF CLAY MASONRY UNIT = 3.625
EQUIVALENT THICKNESS (Te) = 215.3/(11.625)(3.625) = 5.11 INCHES

5.0 INCHES = 4 HOUR FIRE RESISTANCE RATING (TABLE 720.4.1(1))

B — 4 7/8" — CORRIDOR WALL - 1 HOUR RATING - U.L. # U 419, U 465 - 5/8" GYPSUM BOARD EACH SIDE OF 3 5/8" 25 GA. METAL STUDS AT 24" O.C. WITH 3" SOUND ATTENUATION INSULATION. ALL PENETRATIONS TO BE ACOUSTICALLY SEALED- TYP.

C — 4 7/8" — 5/8" GYPSUM BOARD EACH SIDE OF 3 5/8" 25 GA. METAL STUDS AT 24" O.C.

D — 3 1/2" — SHAFT ENCLOSURE WALL - 2 HOUR RATING U.L. # U 438, U 467
2 LAYERS 1/2" TYPE 'X' GYPSUM BOARD + 1 LAYER 1" GYPSUM BOARD LINER PANEL ON STEEL C-H STUDS AT 24" O.C.

E — 7 1/4" — 5/8" GYPSUM BOARD EACH SIDE OF 6" 25 GA. METAL STUDS AT 24" O.C.

E.1 — 1 HOUR RATED UL #U419

F — 4 1/4" — (1) LAYER 5/8" GYPSUM BOARD ONE SIDE OF 3 5/8" 25 GA. METAL STUDS AT 24" O.C.

G — 6 5/8" — (1) LAYER 5/8" GYPSUM BOARD ONE SIDE OF 3 5/8" 25 GA. METAL STUDS AT 24" O.C.

H — 8" — CONCRETE MASONRY UNITS. NOMINAL WIDTH 8". ACTUAL WIDTH 7 5/8". 2 HOUR RATING - U.L. # U 905

J — 5 1/8" — DWELLING UNIT SEPARATION - 1 HOUR RATING REQUIRED, 2 HOUR PROVIDED - U.L. # U 493 - 2 LAYERS 5/8" GYPSUM BOARD EACH SIDE OF 3 5/8" 25 GA. METAL STUDS AT 24" O.C. WITH 3" SOUND ATTENUATION INSULATION. ALL PENETRATIONS TO BE ACOUSTICALLY SEALED- TYP.

NOTE: ALL PARTITIONS SHOWN SHADED OR HATCHED SHALL EXTEND FROM TOP OF SLAB TO UNDERSIDE OF SLAB ABOVE. TOP OF PARTITIONS NOT SHOWN HATCHED SHALL BE 8'-0" ABOVE FINISH FLOOR WITH TOP OF PARTITION FINISHED WITH (1) LAYER OF GYPSUM BOARD.

NEUMANN SMITH & ASSOCIATES

Architecture
Planning
Interior Design

400 Galleria Officentre
Suite 555
Southfield, Michigan 48034

248-352-8310
FAX 248-352-1821
NS@neumannsmith.com

Metro Lofts
Royal Oak, Michigan

Revisions

MAY 28, 2004 - ISSUED FOR BIDS
MAY 13, 2004 - ISSUED FOR MASONRY PRICING

Date
4-14-2004
Drawn
PTM
Checked
MGD
Approved
PTM
Bidpak Number

☐ Preliminary
■ Construction
☐ Record

Do not scale
Use figured dimensions only
Copyright © 2003

Job Number
23091
Title
Enlarged Unit Plans

Scale: 1/4" = 1'-0"
Sheet
A213

F:\2003\23091 - Metro Lofts\30-Construction Documents\23091A213.dwg, 5/28/2004 4:18:24 PM, pat, Xerox 5100ps-scanner.pc3, 1:1, Neumann/Smith & Assoc.

PARTITION LEGEND

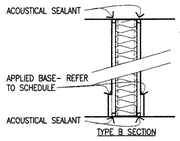

A — 8"
NOMINAL 8" WIDE BRICK MASONRY
4 HOUR FIRE RESISTANCE RATING AS CALCULATED BY SECTION 720.4.1.1 OF THE MICHIGAN BUILDING CODE

EQUATION 7-8 Te = V/LH
VOLUME (V) OF CLAY MASONRY UNIT = 215.3 CU. IN.
LENGTH (L) OF CLAY MASONRY UNIT = 11.625 IN.
HEIGHT (H) OF CLAY MASONRY UNIT = 3.625
EQUIVALENT THICKNESS (Te) = 215.3/(11.625)(3.625) = 5.11 INCHES

5.0 INCHES = 4 HOUR FIRE RESISTANCE RATING (TABLE 720.4.1(1))

B — 4 7/8"
CORRIDOR WALL - 1 HOUR RATING - U.L. # U 419, U 465 - 5/8" GYPSUM BOARD EACH SIDE OF 3 5/8" 25 GA. METAL STUDS AT 24" O.C. WITH 3" SOUND ATTENUATION INSULATION. ALL PENETRATIONS TO BE ACOUSTICALLY SEALED- TYP.

C — 4 7/8"
5/8" GYPSUM BOARD EACH SIDE OF 3 5/8" 25 GA. METAL STUDS AT 24" O.C.

D — 3 1/2"
SHAFT ENCLOSURE WALL - 2 HOUR RATING U.L. # U 438, U 467
2 LAYERS 1/2" TYPE 'X' GYPSUM BOARD + 1 LAYER 1" GYPSUM BOARD LINER PANEL ON STEEL C-H STUDS AT 24" O.C.

E — 7 1/4" (E.1)
5/8" GYPSUM BOARD EACH SIDE OF 6" 25 GA. METAL STUDS AT 24" O.C.

E.1 - 1 HOUR RATED U.L. #U419

F — 4 1/4"
(1) LAYER 5/8" GYPSUM BOARD ONE SIDE OF 3 5/8" 25 GA. METAL STUDS AT 24" O.C.

G — 6 3/8"
(1) LAYER 5/8" GYPSUM BOARD ONE SIDE OF 3 5/8" 25 GA. METAL STUDS AT 24" O.C.

H — 8"
CONCRETE MASONRY UNITS. NOMINAL WIDTH 8". ACTUAL WIDTH 7 5/8". 2 HOUR RATING - U.L. # U 905

J — 6 1/8"
DWELLING UNIT SEPARATION - 1 HOUR RATING REQUIRED, 2 HOUR PROVIDED - U.L. # U 493 - 2 LAYERS 5/8" GYPSUM BOARD EACH SIDE OF 3 5/8" 25 GA. METAL STUDS AT 24" O.C. WITH 3" SOUND ATTENUATION INSULATION. ALL PENETRATIONS TO BE ACOUSTICALLY SEALED- TYP.

NOTE: ALL PARTITIONS SHOWN SHADED OR HATCHED SHALL EXTEND FROM TOP OF SLAB TO UNDERSIDE OF SLAB ABOVE. TOP OF PARTITIONS NOT SHOWN HATCHED SHALL BE 8'-0" ABOVE FINISH FLOOR WITH TOP OF PARTITION FINISHED WITH (1) LAYER OF GYPSUM BOARD.

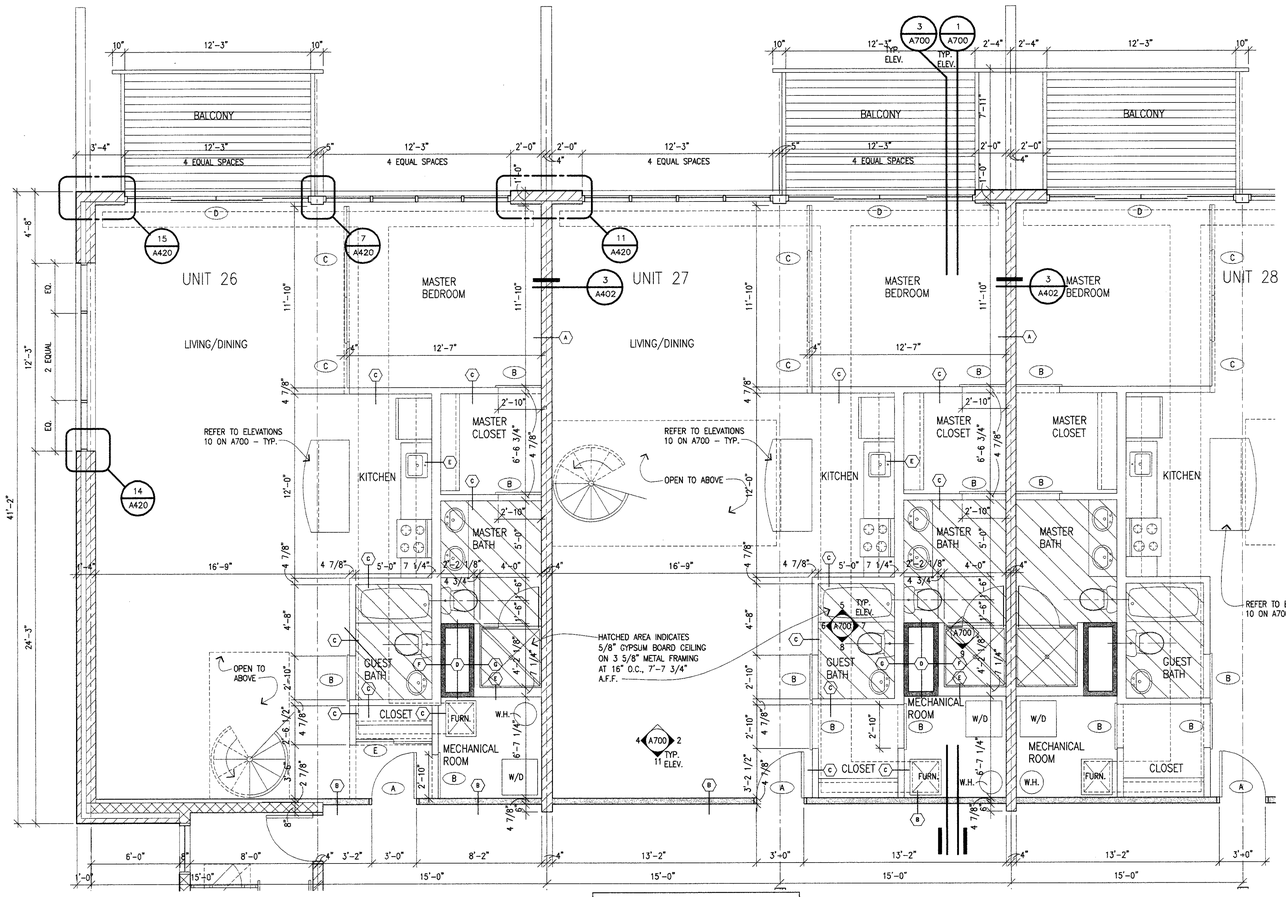

1 / A203 THIRD FLOOR ENLARGED FLOOR PLAN
1/4"=1'-0"

UNIT 27 LAYOUT

TYPICAL LAYOUT FOR UNITS 27, 29
LAYOUT OPPOSITE FOR UNIT 28

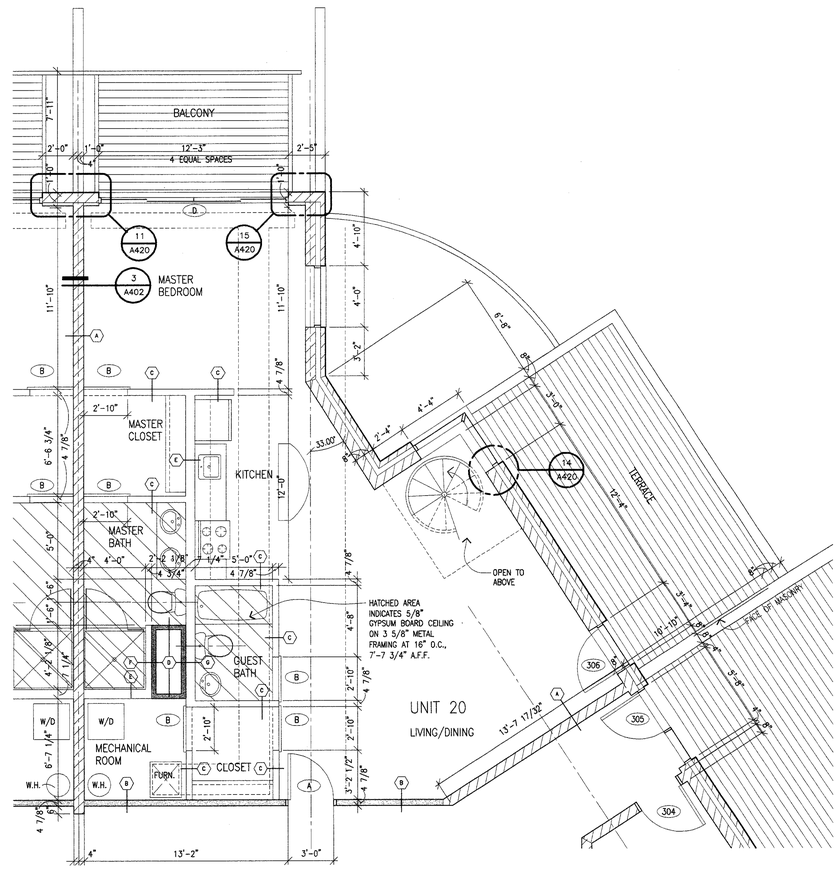

2 / A203 THIRD FLOOR ENLARGED FLOOR PLAN
1/4"=1'-0"

NEUMANN SMITH & ASSOCIATES

Architecture
Planning
Interior Design

400 Galleria Officentre
Suite 555
Southfield, Michigan 48034

248-352-8310
FAX 248-352-1821
NS@neumannsmith.com

Metro Lofts
Royal Oak, Michigan

Revisions

MAY 28, 2004 - ISSUED FOR BIDS
MAY 13, 2004 - ISSUED FOR MASONRY PRICING

Date
4-14-2004
Drawn
PTM
Checked
MGD
Approved
PTM
Bidpak Number

☐ Preliminary
■ Construction
☐ Record

Do not scale
Use figured dimensions only
Copyright © 2003

Job Number
23091
Title
Enlarged Unit Plans

Scale: 1/4" = 1'-0"
Sheet
A214

F:\2003\23091 - Metro Lofts\30-Construction Documents\23091A214.dwg, 5/28/2004 4:19:04 PM, pat, Xerox 5100p-scanner.pc3, 1:1, Neumann/Smith & Assoc.

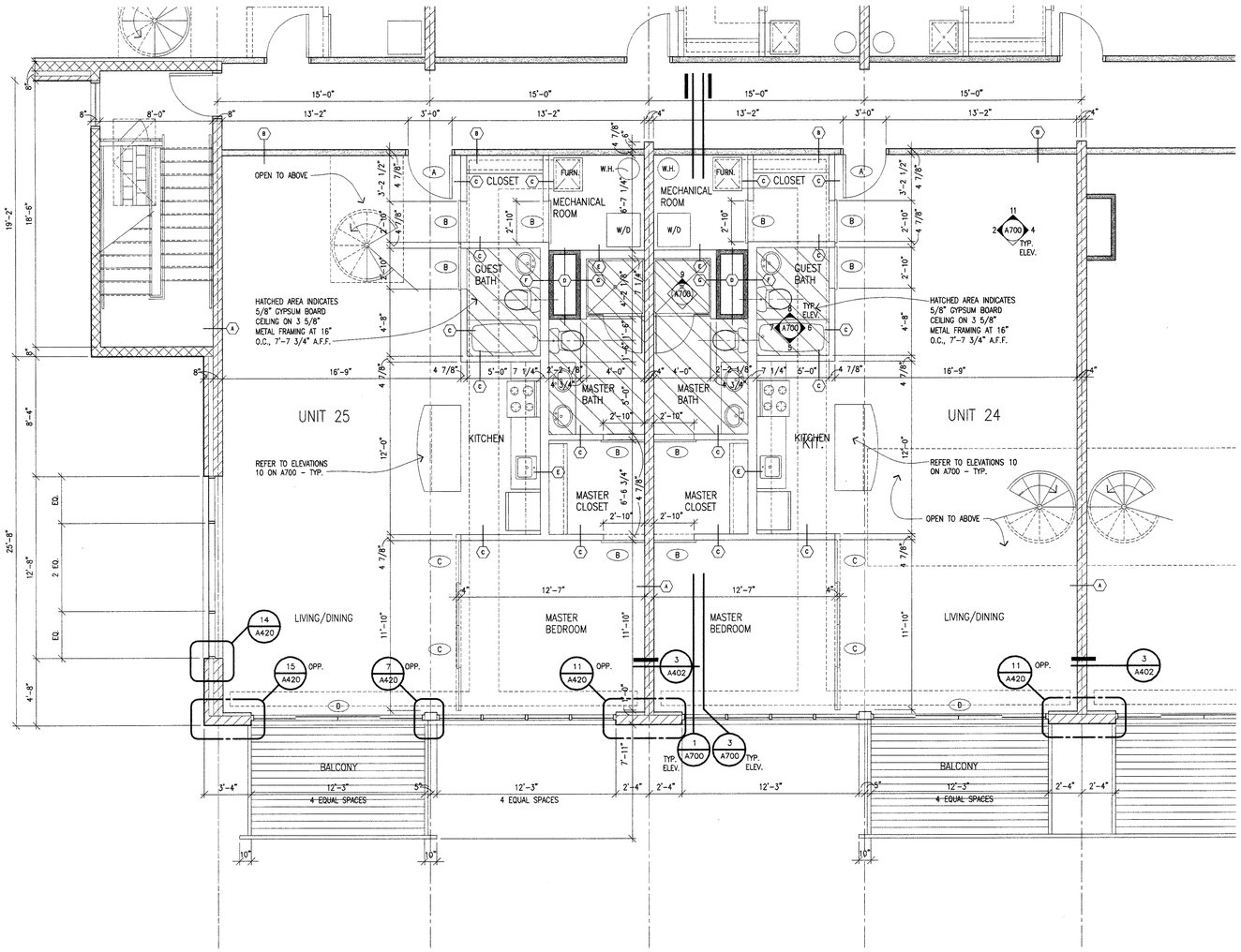

1 A203 THIRD FLOOR ENLARGED FLOOR PLAN
1/4"=1'-0"

UNIT 24 LAYOUT
TYPICAL LAYOUT FOR UNITS 24, 22 LAYOUT OPPOSITE FOR UNIT 23

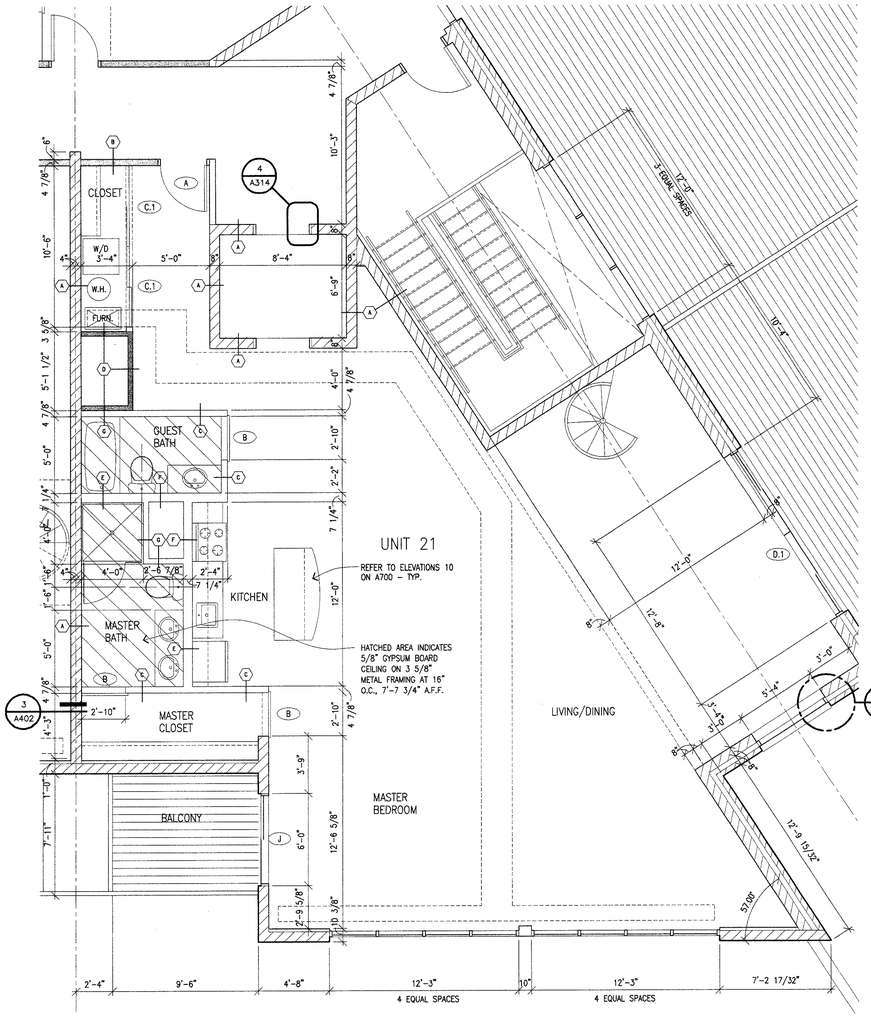

2 A203 THIRD FLOOR ENLARGED FLOOR PLAN
1/4"=1'-0"

PARTITION LEGEND

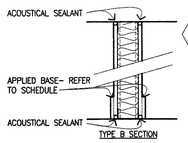

A 8"
NOMINAL 8" WIDE BRICK MASONRY
4 HOUR FIRE RESISTANCE RATING AS CALCULATED BY SECTION 720.4.1.1 OF THE MICHIGAN BUILDING CODE

EQUATION 7–8 Te = V/LH
VOLUME (V) OF CLAY MASONRY UNIT = 215.3 CU. IN.
LENGTH (L) OF CLAY MASONRY UNIT = 11.625 IN.
HEIGHT (H) OF CLAY MASONRY UNIT = 3.625
EQUIVALENT THICKNESS (Te) = 215.3/(11.625)(3.625) = 5.11 INCHES

5.0 INCHES = 4 HOUR FIRE RESISTANCE RATING (TABLE 720.4.1(1))

B 4 7/8"
CORRIDOR WALL – 1 HOUR RATING – U.L. # U 419, U 465 – 5/8" GYPSUM BOARD EACH SIDE OF 3 5/8" 25 GA. METAL STUDS AT 24" O.C. WITH 3" SOUND ATTENUATION INSULATION. ALL PENETRATIONS TO BE ACOUSTICALLY SEALED– TYP.

C 4 7/8"
5/8" GYPSUM BOARD EACH SIDE OF 3 5/8" 25 GA. METAL STUDS AT 24" O.C.

D 3 1/2"
SHAFT ENCLOSURE WALL – 2 HOUR RATING U.L. # U 438, U 467
2 LAYERS 1/2" TYPE 'X' GYPSUM BOARD + 1 LAYER 1" GYPSUM BOARD LINER PANEL ON STEEL C–H STUDS AT 24" O.C.

E 7 1/4"
5/8" GYPSUM BOARD EACH SIDE OF 6" 25 GA. METAL STUDS AT 24" O.C.

E.1 E.1 – 1 HOUR RATED UL #U419

F 4 1/4"
(1) LAYER 5/8" GYPSUM BOARD ONE SIDE OF 3 5/8" 25 GA. METAL STUDS AT 24" O.C.

G 6 5/8"
(1) LAYER 5/8" GYPSUM BOARD ONE SIDE OF 3 5/8" 25 GA. METAL STUDS AT 24" O.C.

H 8"
CONCRETE MASONRY UNITS. NOMINAL WIDTH 8". ACTUAL WIDTH 7 5/8". 2 HOUR RATING – U.L. # U 905

J 6 1/8"
DWELLING UNIT SEPARATION – 1 HOUR RATING REQUIRED, 2 HOUR PROVIDED – U.L. # U 493 – 2 LAYERS 5/8" GYPSUM BOARD EACH SIDE OF 3 5/8" 25 GA. METAL STUDS AT 24" O.C. WITH 3" SOUND ATTENUATION INSULATION. ALL PENETRATIONS TO BE ACOUSTICALLY SEALED– TYP.

NOTE: ALL PARTITIONS SHOWN SHADED OR HATCHED SHALL EXTEND FROM TOP OF SLAB TO UNDERSIDE OF SLAB ABOVE. TOP OF PARTITIONS NOT SHOWN HATCHED SHALL BE 8'–0" ABOVE FINISH FLOOR WITH TOP OF PARTITION FINISHED WITH (1) LAYER OF GYPSUM BOARD.

NEUMANN SMITH & ASSOCIATES

Architecture
Planning
Interior Design

400 Galleria Officentre
Suite 555
Southfield, Michigan 48034

248-352-8310
FAX 248-352-1821
NS@neumannsmith.com

Metro Lofts
Royal Oak, Michigan

Revisions

STATE OF MICHIGAN REGISTERED ARCHITECT JOSEPH G. SMITH

MAY 28, 2004 – ISSUED FOR BIDS
MAY 13, 2004 – ISSUED FOR MASONRY PRICING

Date
4-14-2004
Drawn
PTM
Checked
MGD
Approved
PTM
Bidpak Number

☐ Preliminary
■ Construction
☐ Record

Do not scale
Use figured dimensions only
Copyright © 2003

Job Number
23091
Title
Enlarged Unit Plans

Scale: 1/4" = 1'-0"
Sheet
A215

F:\2003\23091 - Metro Lofts\30-Construction Documents\23091A215.dwg, 5/28/2004 4:18:44 PM, pat, Xerox 510dp scanner.pc3, 1:1, Neumann/Smith & Assoc.

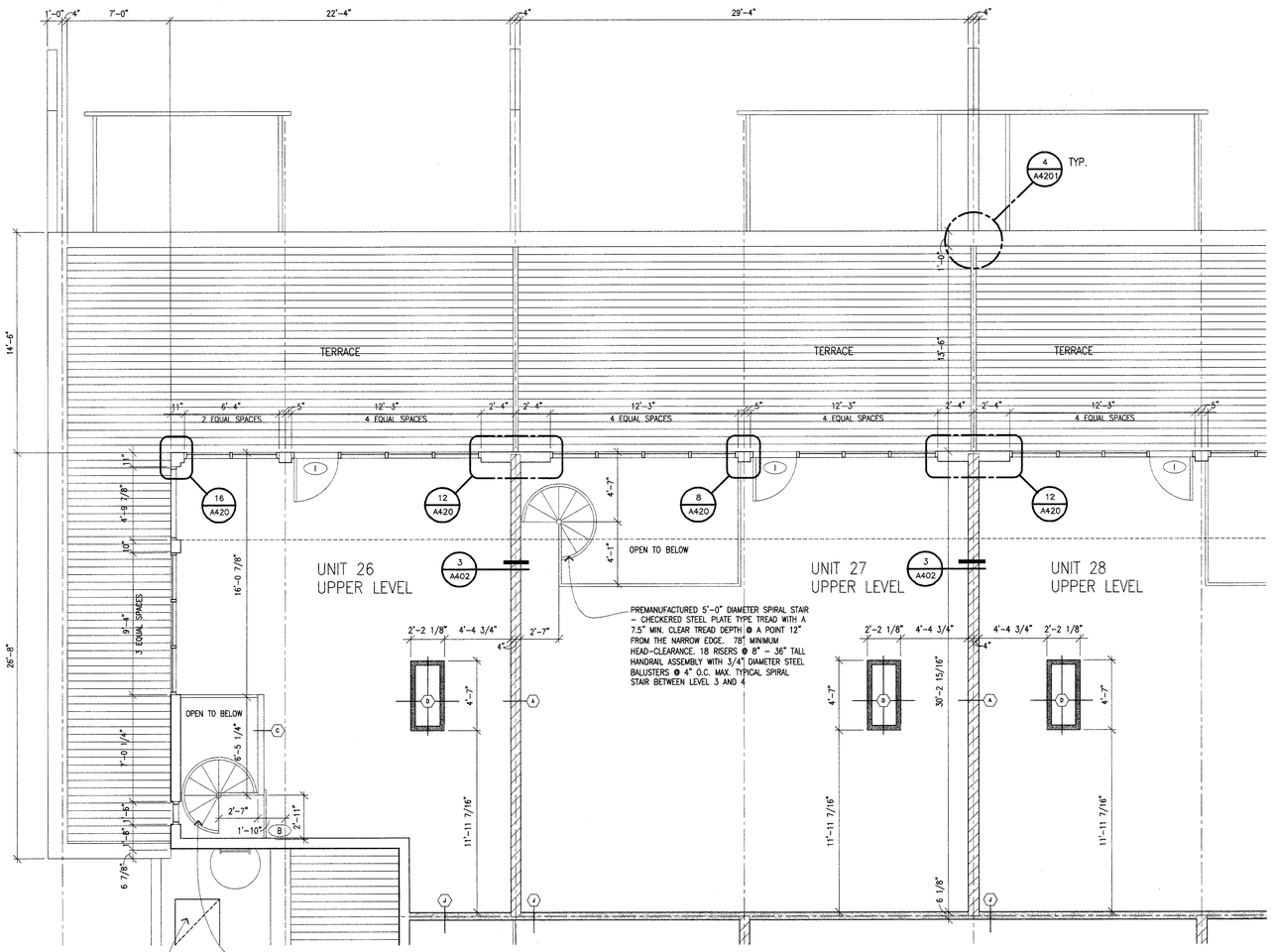

1 A204 FOURTH FLOOR ENLARGED FLOOR PLAN
1/4"=1'-0"

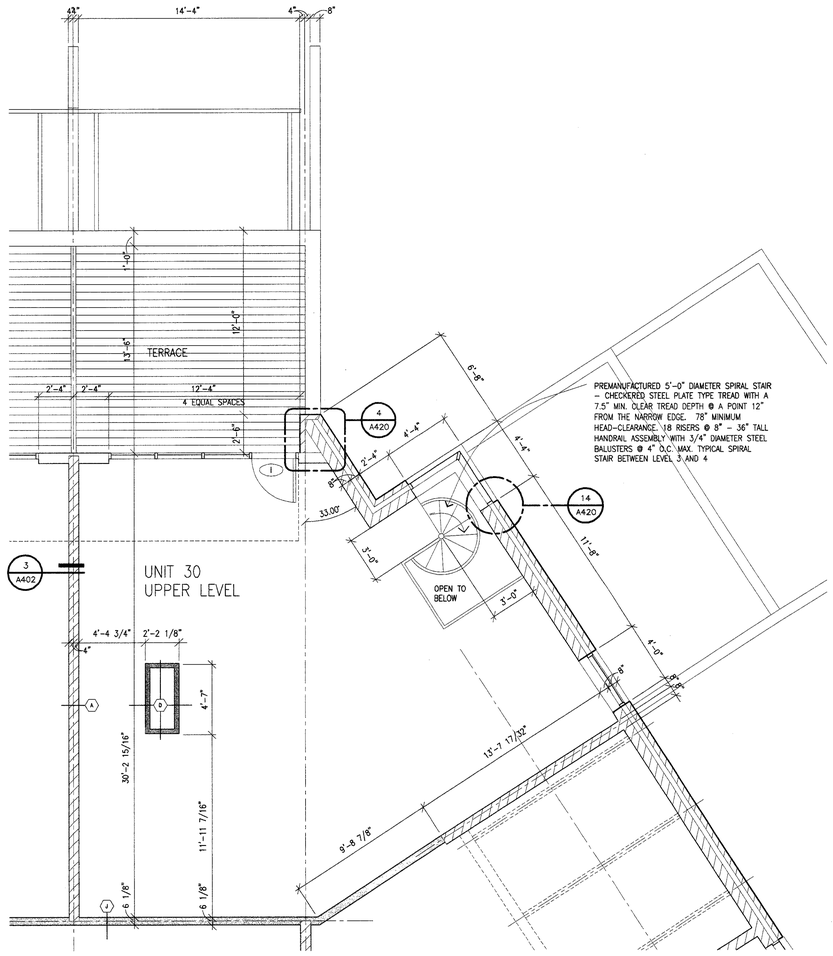

2 A204 FOURTH FLOOR ENLARGED FLOOR PLAN
1/4"=1'-0"

PARTITION LEGEND

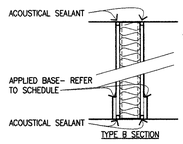

A — 8" — NOMINAL 8" WIDE BRICK MASONRY
4 HOUR FIRE RESISTANCE RATING AS CALCULATED BY SECTION 720.4.1.1 OF THE MICHIGAN BUILDING CODE

EQUATION 7-8 Te = V/LH
VOLUME (V) OF CLAY MASONRY UNIT = 215.3 CU. IN.
LENGTH (L) OF CLAY MASONRY UNIT = 11.625 IN.
HEIGHT (H) OF CLAY MASONRY UNIT = 3.625
EQUIVALENT THICKNESS (Te) = 215.3/(11.625)(3.625) = 5.11 INCHES

5.0 INCHES = 4 HOUR FIRE RESISTANCE RATING (TABLE 720.4.1(1))

B — 4 7/8" — CORRIDOR WALL – 1 HOUR RATING – U.L. # U 419, U 465 – 5/8" GYPSUM BOARD EACH SIDE OF 3 5/8" 25 GA. METAL STUDS AT 24" O.C. WITH 3" SOUND ATTENUATION INSULATION. ALL PENETRATIONS TO BE ACOUSTICALLY SEALED- TYP.

C — 4 7/8" — 5/8" GYPSUM BOARD EACH SIDE OF 3 5/8" 25 GA. METAL STUDS AT 24" O.C.

D — 3 1/2" — SHAFT ENCLOSURE WALL – 2 HOUR RATING U.L. # U 438, U 467
2 LAYERS 1/2" TYPE 'X' GYPSUM BOARD + 1 LAYER 1" GYPSUM BOARD LINER PANEL ON STEEL C-H STUDS AT 24" O.C.

E.1 — E — 7 1/4" — 5/8" GYPSUM BOARD EACH SIDE OF 6" 25 GA. METAL STUDS AT 24" O.C.
E.1 – 1 HOUR RATED UL #U419

F — 4 1/4" — (1) LAYER 5/8" GYPSUM BOARD ONE SIDE OF 3 5/8" 25 GA. METAL STUDS AT 24" O.C.

G — 6 5/8" — (1) LAYER 5/8" GYPSUM BOARD ONE SIDE OF 3 5/8" 25 GA. METAL STUDS AT 24" O.C.

H — 8" — CONCRETE MASONRY UNITS. NOMINAL WIDTH 8". ACTUAL WIDTH 7 5/8". 2 HOUR RATING – U.L. # U 905

J — 6 1/8" — DWELLING UNIT SEPARATION – 1 HOUR RATING REQUIRED, 2 HOUR PROVIDED – U.L. # U 493 – 2 LAYERS 5/8" GYPSUM BOARD EACH SIDE OF 3 5/8" 25 GA. METAL STUDS AT 24" O.C. WITH 3" SOUND ATTENUATION INSULATION. ALL PENETRATIONS TO BE ACOUSTICALLY SEALED- TYP.

NOTE: ALL PARTITIONS SHOWN SHADED OR HATCHED SHALL EXTEND FROM TOP OF SLAB TO UNDERSIDE OF SLAB ABOVE. TOP OF PARTITIONS NOT SHOWN HATCHED SHALL BE 8'-0" ABOVE FINISH FLOOR WITH TOP OF PARTITION FINISHED WITH (1) LAYER OF GYPSUM BOARD.

NEUMANN SMITH & ASSOCIATES
Architecture
Planning
Interior Design
400 Galleria Officentre
Suite 555
Southfield, Michigan 48034
248-352-8310
FAX 248-352-1821
NS@neumannsmith.com

Metro Lofts
Royal Oak, Michigan

Revisions

MAY 28, 2004 – ISSUED FOR BIDS
MAY 13, 2004 – ISSUED FOR MASONRY PRICING

Date 4-14-2004
Drawn PTM
Checked MGD
Approved PTM
Bidpak Number

☐ Preliminary
■ Construction
☐ Record

Do not scale
Use figured dimensions only
Copyright © 2003

Job Number 23091
Title **Enlarged Unit Plans**

Scale: 1/4" = 1'-0"
Sheet **A216**

F:\2003\23091 - Metro Lofts\30-Construction Documents\23091A216.dwg, 9/28/2004 4:18:25 PM, patt, Xerox 5100dp scanner.pc3, 1:1, Neumann/Smith & Assoc.

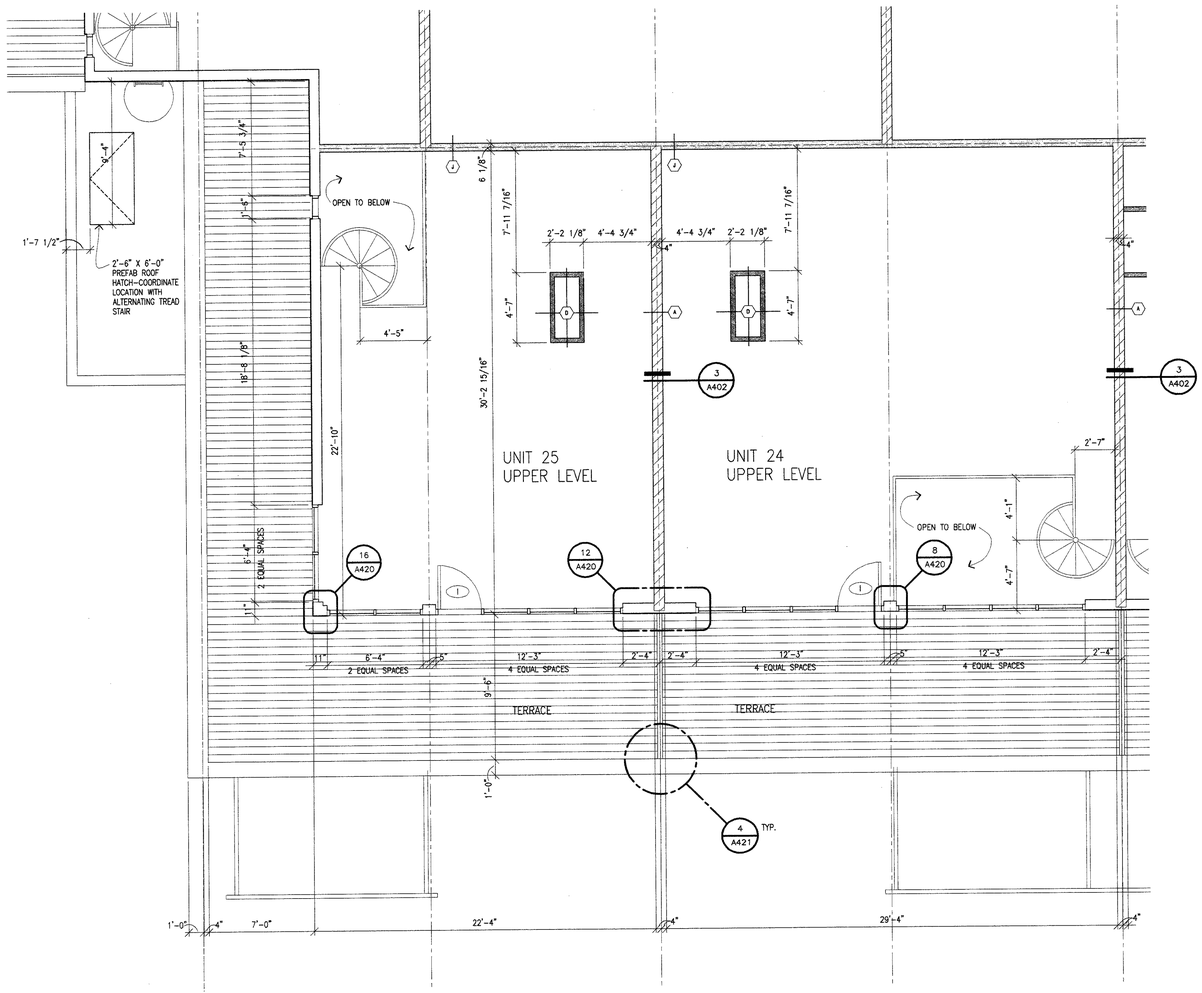

1 A204 FOURTH FLOOR ENLARGED FLOOR PLAN
1/4"=1'-0"

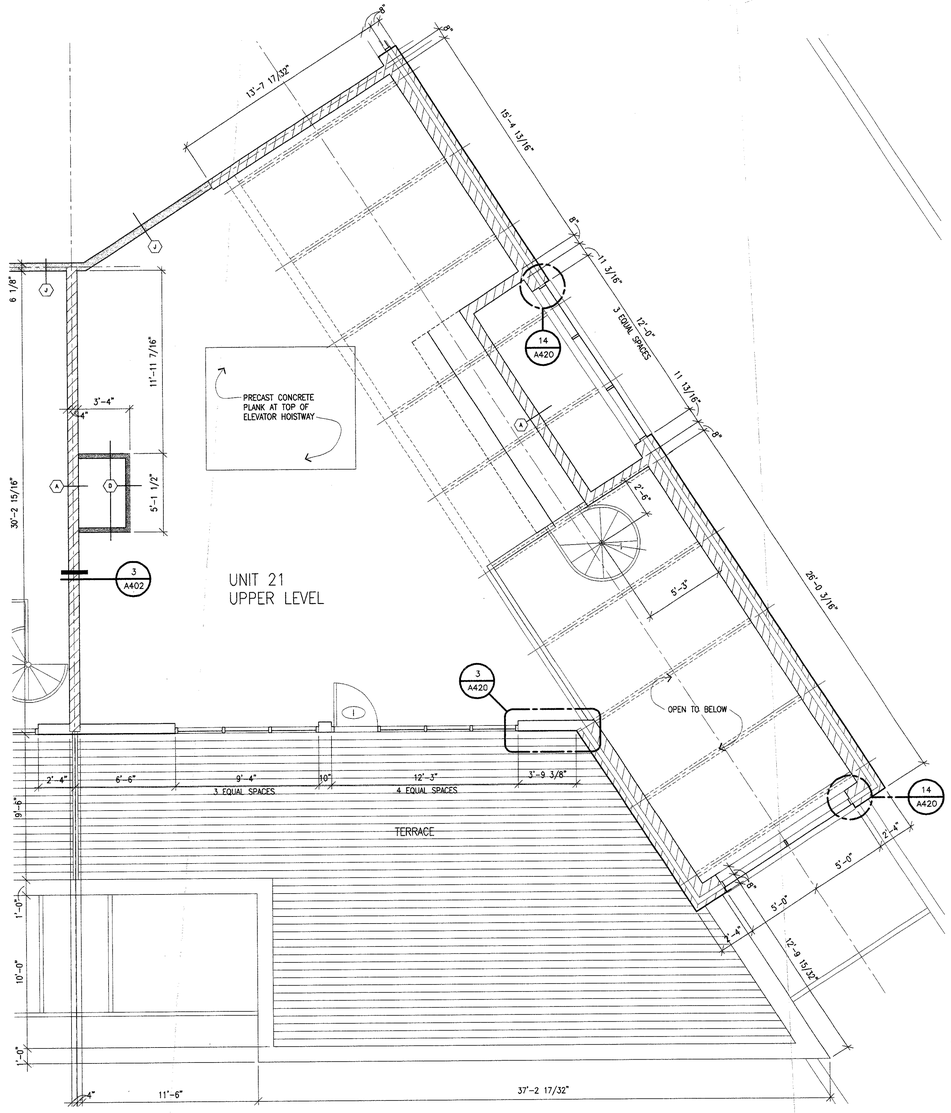

2 A204 FOURTH FLOOR ENLARGED FLOOR PLAN
1/4"=1'-0"

PARTITION LEGEND

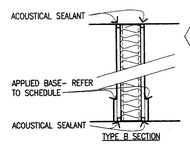

A — 8" — NOMINAL 8" WIDE BRICK MASONRY
4 HOUR FIRE RESISTANCE RATING AS CALCULATED BY SECTION 720.4.1.1 OF THE MICHIGAN BUILDING CODE

EQUATION 7-8 Te = V/LH
VOLUME (V) OF CLAY MASONRY UNIT = 215.3 CU. IN.
LENGTH (L) OF CLAY MASONRY UNIT = 11.625 IN.
HEIGHT (H) OF CLAY MASONRY UNIT = 3.625
EQUIVALENT THICKNESS (Te) = 215.3/(11.625)(3.625) = 5.11 INCHES

5.0 INCHES = 4 HOUR FIRE RESISTANCE RATING (TABLE 720.4.1(1))

B — 4 7/8" — CORRIDOR WALL – 1 HOUR RATING – U.L. # U 419, U 465 – 5/8" GYPSUM BOARD EACH SIDE OF 3 5/8" 25 GA. METAL STUDS AT 24" O.C. WITH 3" SOUND ATTENUATION INSULATION. ALL PENETRATIONS TO BE ACOUSTICALLY SEALED– TYP.

C — 4 7/8" — 5/8" GYPSUM BOARD EACH SIDE OF 3 5/8" 25 GA. METAL STUDS AT 24" O.C.

D — 3 1/2" — SHAFT ENCLOSURE WALL – 2 HOUR RATING U.L. # U 438, U 467
2 LAYERS 1/2" TYPE "X" GYPSUM BOARD + 1 LAYER 1" GYPSUM BOARD LINER PANEL ON STEEL C-H STUDS AT 24" O.C.

E.1 / E — 7 1/4" — 5/8" GYPSUM BOARD EACH SIDE OF 6" 25 GA. METAL STUDS AT 24" O.C.
E.1 – 1 HOUR RATED UL #U419

F — 4 1/4" — (1) LAYER 5/8" GYPSUM BOARD ONE SIDE OF 3 5/8" 25 GA. METAL STUDS AT 24" O.C.

G — 6 5/8" — (1) LAYER 5/8" GYPSUM BOARD ONE SIDE OF 3 5/8" 25 GA. METAL STUDS AT 24" O.C.

H — 8" — CONCRETE MASONRY UNITS. NOMINAL WIDTH 8". ACTUAL WIDTH 7 5/8". 2 HOUR RATING – U.L. # U 905

J — 6 1/8" — DWELLING UNIT SEPARATION – 1 HOUR RATING REQUIRED, 2 HOUR PROVIDED – U.L. # U 493 – 2 LAYERS 5/8" GYPSUM BOARD EACH SIDE OF 3 5/8" 25 GA. METAL STUDS AT 24" O.C. WITH 3" SOUND ATTENUATION INSULATION. ALL PENETRATIONS TO BE ACOUSTICALLY SEALED– TYP.

NOTE: ALL PARTITIONS SHOWN SHADED OR HATCHED SHALL EXTEND FROM TOP OF SLAB TO UNDERSIDE OF SLAB ABOVE. TOP OF PARTITIONS NOT SHOWN HATCHED SHALL BE 8'-0" ABOVE FINISH FLOOR WITH TOP OF PARTITION FINISHED WITH (1) LAYER OF GYPSUM BOARD.

NEUMANN SMITH & ASSOCIATES

Architecture
Planning
Interior Design

400 Galleria Officentre
Suite 555
Southfield, Michigan 48034

248-352-8310
FAX 248-352-1821
NS@neumannsmith.com

Metro Lofts
Royal Oak, Michigan

Revisions

STATE OF MICHIGAN — REGISTERED ARCHITECT — LAWRENCE M. SMITH — ARCHITECT

MAY 13, 2004 – ISSUED FOR MASONRY PRICING
MAY 13, 2004 – ISSUED FOR MASONRY PRICING

Date
4-14-2004
Drawn
PTM
Checked
MGD
Approved
PTM
Bidpak Number

☐ Preliminary
■ Construction
☐ Record

Do not scale
Use figured dimensions only
Copyright © 2003

Job Number
23091
Title
Enlarged Unit Plans

Scale: 1/4" = 1'-0"
Sheet
A217

F:\2003\23091 - Metro Lofts\30-Construction Documents\23091A217.dwg, 5/28/2004 4:18:04 PM, , pat, Xerox 5100p-scanner.pc3, 1:1, Neumann/Smith & Assoc.

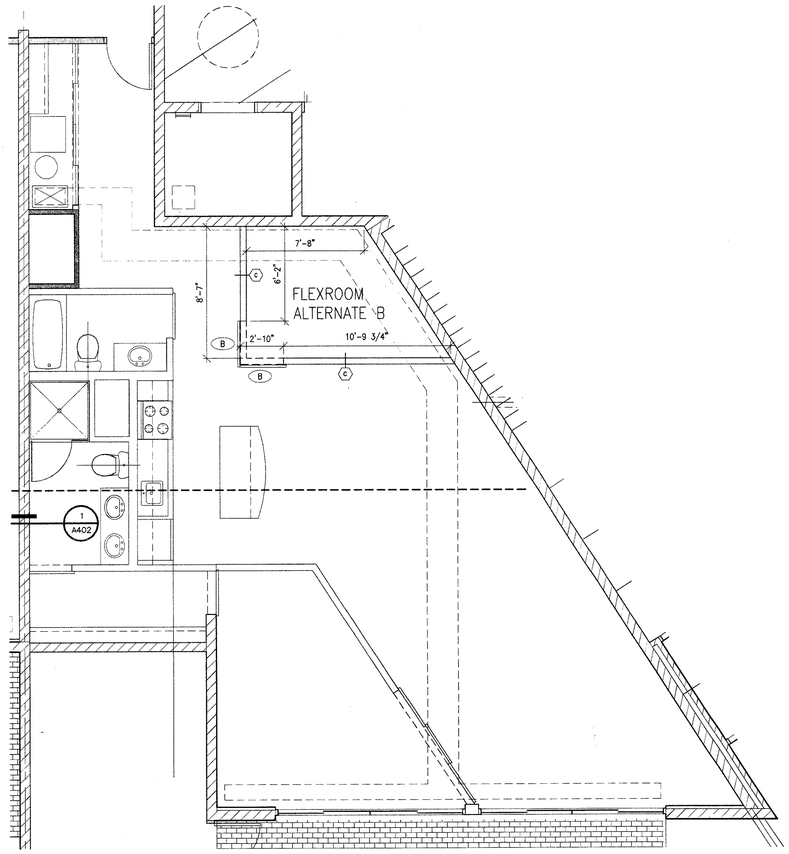

3 A201 FLOOR PLAN ALTERNATE B
1/4"=1'-0"

NOTE:
THIS ALTERNATE IS AVAILABLE FOR UNIT 1

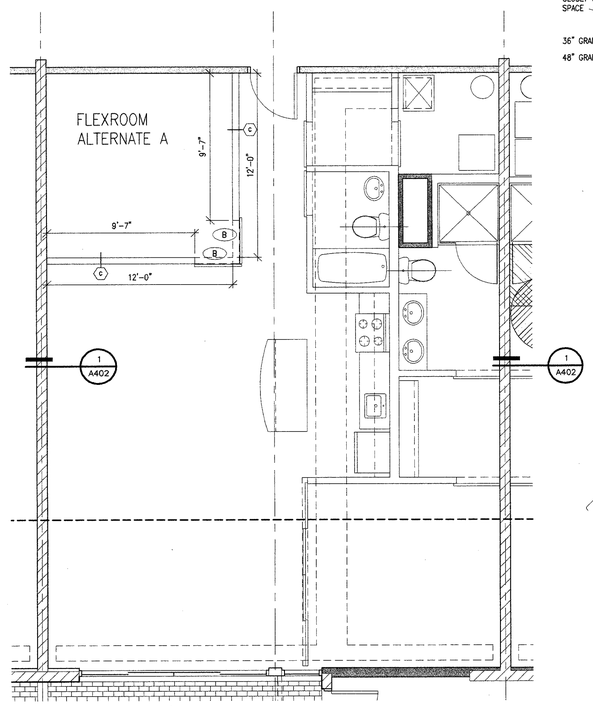

2 A201 FLOOR PLAN ALTERNATE A
1/4"=1'-0"

NOTE:
THIS ALTERNATE IS AVAILABLE FOR UNITS 2, 3, 4, 5, 6, 7, 8, 9, 12, 13, 14, 15, 16, 17, 18, 19

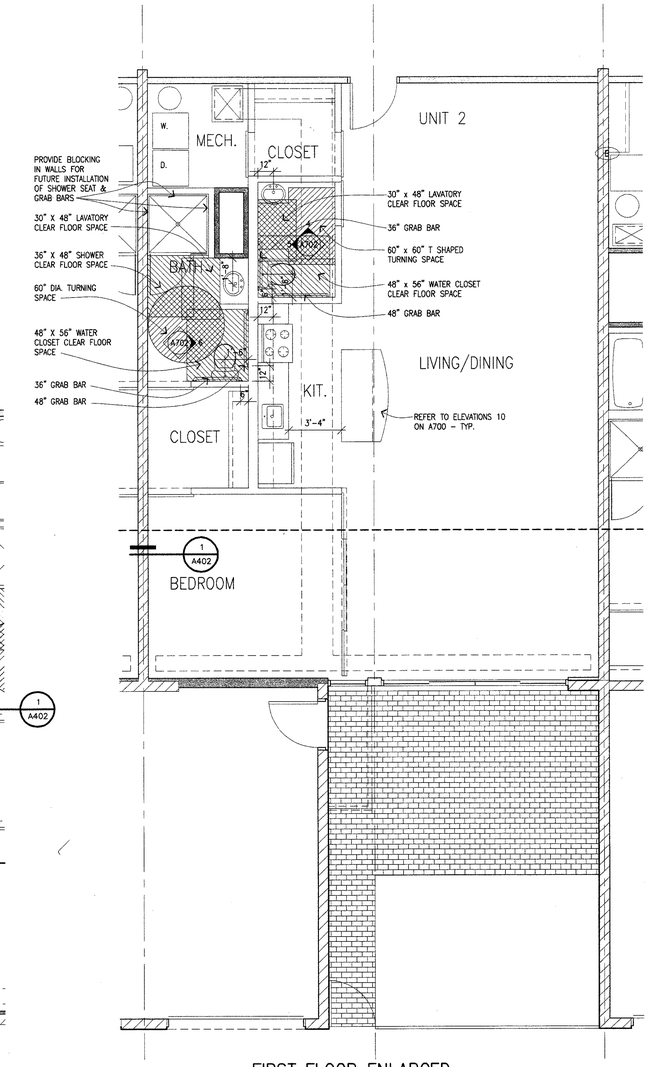

1 A201 FIRST FLOOR ENLARGED FLOOR PLAN TYPE A UNIT
1/4"=1'-0"

NEUMANN
SMITH
& ASSOCIATES

Architecture
Planning
Interior Design

400 Galleria Officentre
Suite 555
Southfield, Michigan 48034

248-352-8310
FAX 248-352-1821
NS@neumannsmith.com

Metro Lofts
Royal Oak, Michigan

Revisions

STATE OF MICHIGAN
LAWRENCE SMITH
REGISTERED ARCHITECT

MAY 28, 2004 – ISSUED FOR BIDS
MAY 13, 2004 – ISSUED FOR MASONRY PRICING

Date
4-14-2004
Drawn
MGD
Checked
MGD
Approved
PTM
Bidpak Number

☐ Preliminary
■ Construction
☐ Record

Do not scale
Use figured dimensions only
Copyright © 2003

Job Number
23091
Title
Enlarged Unit Plans

Scale: 1/4" = 1'-0"
Sheet
A218

F:\2003\23091 - Metro Lofts\30-Construction Documents\23091A218.dwg, 5/28/2004 4:17:45 PM, pat, Xerox 5100p-scanner.pc3, 1:1, Neumann/Smith & Assoc.

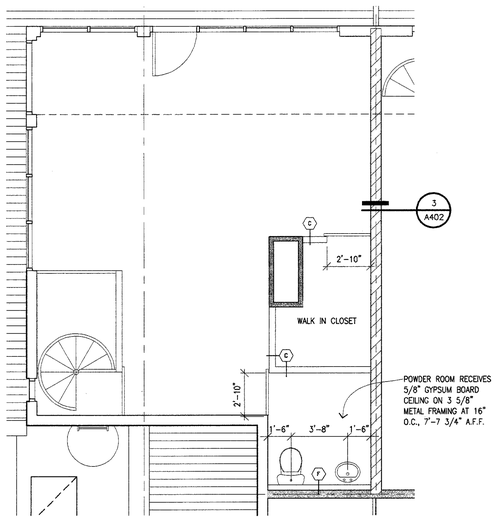

5 A204 — FOURTH FLOOR PLAN
POWDER ROOM ALTERNATE C
1/4"=1'-0"

NOTE:
THIS ALTERNATE IS AVAILABLE FOR UNIT 26

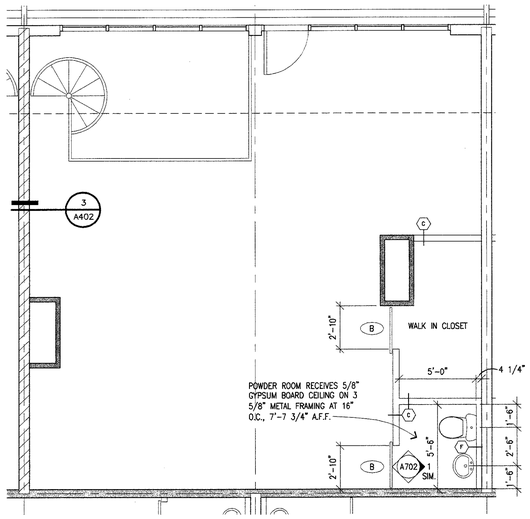

4 A204 — FOURTH FLOOR PLAN
POWDER ROOM ALTERNATE B
1/4"=1'-0"

NOTE:
THIS ALTERNATE IS AVAILABLE FOR UNIT 27, 28, 29, 30 (OPPOSITE HAND FOR UNITS 28, 30)

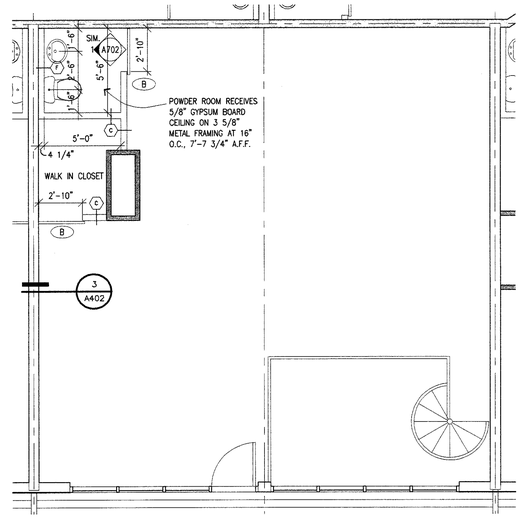

3 A204 — FOURTH FLOOR PLAN
POWDER ROOM ALTERNATE A
1/4"=1'-0"

NOTE:
THIS ALTERNATE IS AVAILABLE FOR UNIT 22, 23, 24, 25 (OPPOSITE HAND FOR UNITS 23, 25)

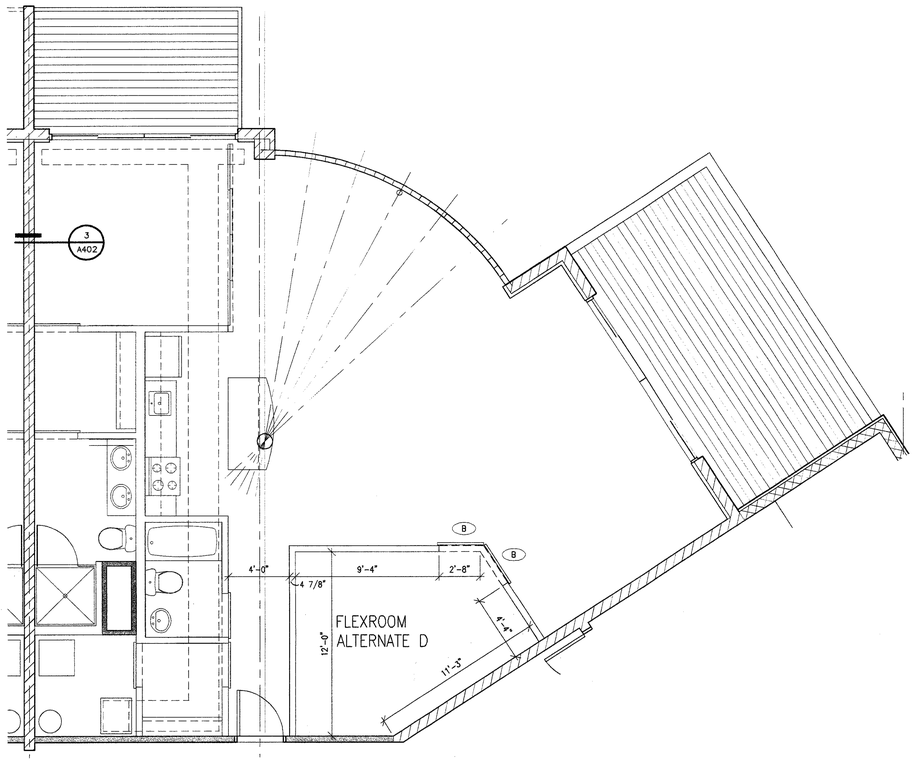

2 A202 — FLOOR PLAN ALTERNATE D
1/4"=1'-0"

NOTE:
THIS ALTERNATE IS AVAILABLE FOR UNIT 20

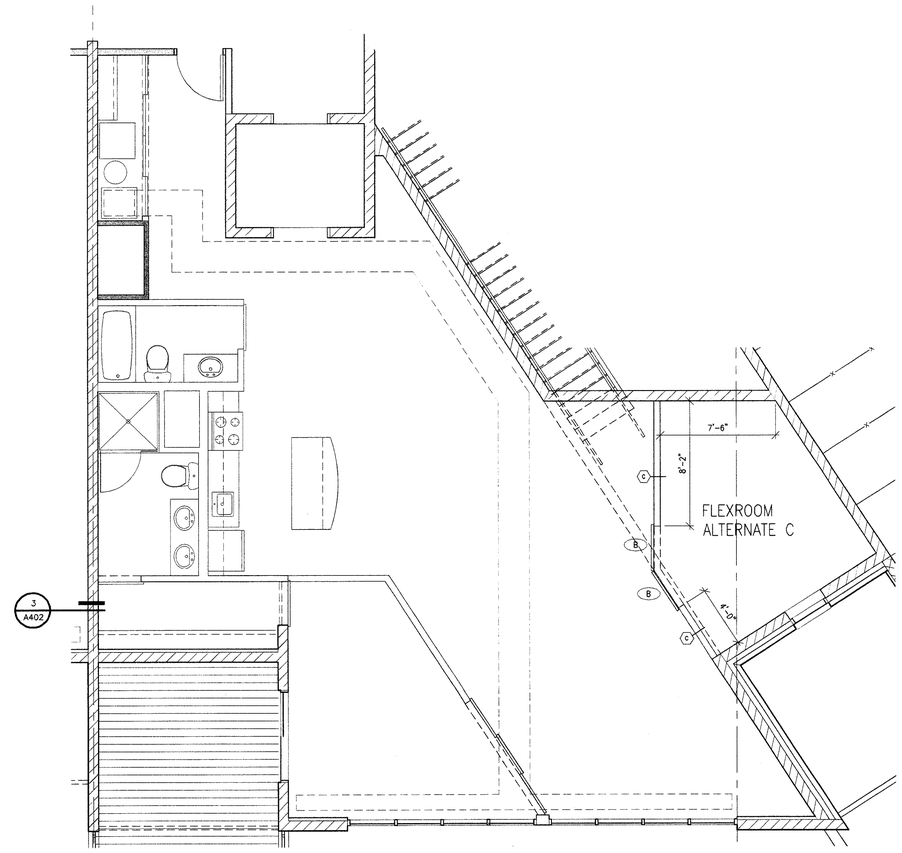

1 A202 — FLOOR PLAN ALTERNATE C
1/4"=1'-0"

NOTE:
THIS ALTERNATE IS AVAILABLE FOR UNIT 11

NEUMANN
SMITH
& ASSOCIATES

Architecture
Planning
Interior Design

400 Galleria Officentre
Suite 555
Southfield, Michigan 48034

248-352-8310
FAX 248-352-1821
NS@neumannsmith.com

Metro Lofts
Royal Oak, Michigan

Revisions

STATE OF MICHIGAN
LAWRENCE P. SMITH
ARCHITECT
REGISTERED ARCHITECT

MAY 28, 2004 – ISSUED FOR BIDS
MAY 13, 2004 – ISSUED FOR MASONRY PRICING

Date
4-14-2004
Drawn
MGD
Checked
MGD
Approved
PTM
Bidpak Number

☐ Preliminary
■ Construction
☐ Record

Do not scale
Use figured dimensions only
Copyright © 2003

Job Number
23091
Title
Enlarged Unit Plans

Scale: 1/4" = 1'-0"
Sheet
A219

F:\2003\23091 - Metro Lofts\10-Construction Documents\23091A219.dwg, 5/28/2004 4:17:25 PM, pat, Xerox 510dp-scanner.pc3, 1:1, Neumann/Smith & Assoc.

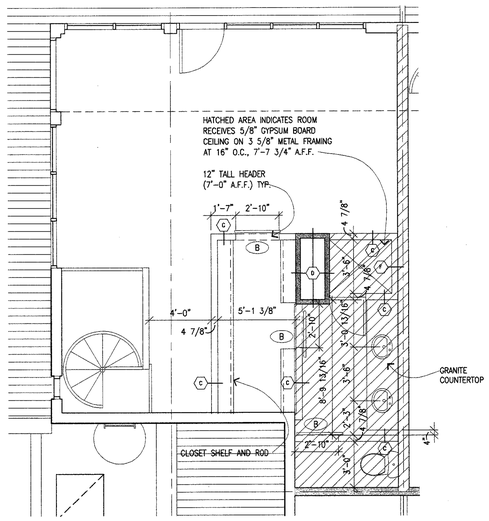

5 A204 FLOOR PLAN ALTERNATE H
1/4"=1'-0"

NOTE:
THIS ALTERNATE IS AVAILABLE FOR UNIT 26

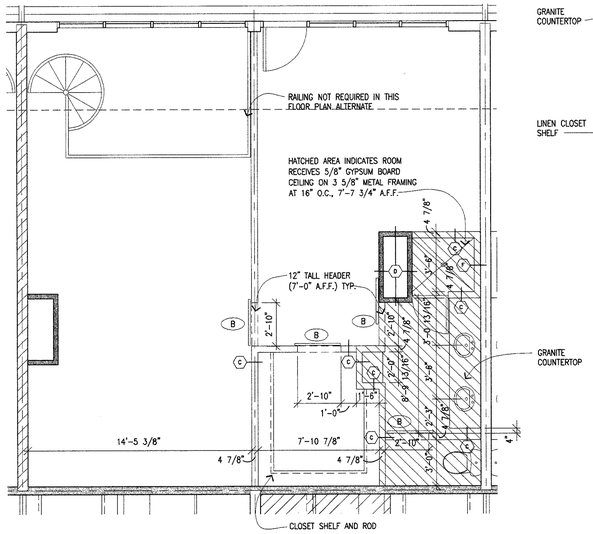

4 A204 FLOOR PLAN ALTERNATE G
1/4"=1'-0"

NOTE:
THIS ALTERNATE IS AVAILABLE FOR UNIT 27, 28, 29, 30 (OPPOSITE HAND FOR UNITS 28, 30)

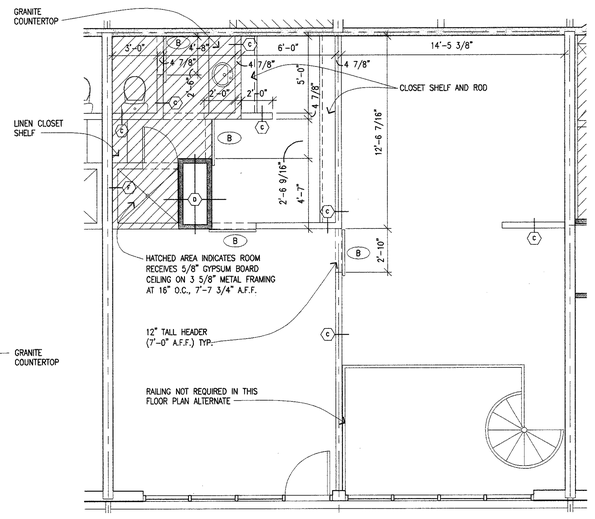

3 A204 FLOOR PLAN ALTERNATE F
1/4"=1'-0"

NOTE:
THIS ALTERNATE IS AVAILABLE FOR UNIT 22, 23, 24, 25 (OPPOSITE HAND FOR UNITS 23, 25)

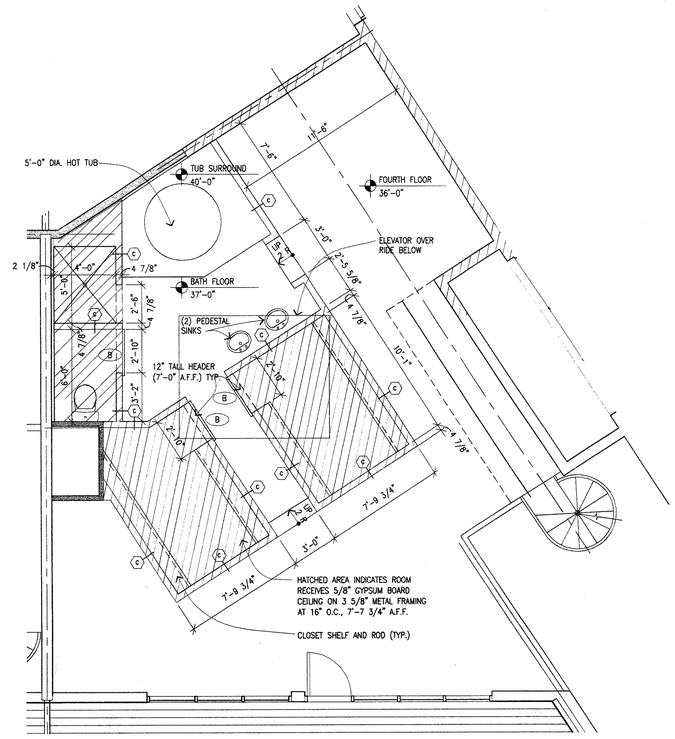

2 A204 FLOOR PLAN ALTERNATE E
1/4"=1'-0"

NOTE:
THIS ALTERNATE IS AVAILABLE FOR UNIT 21

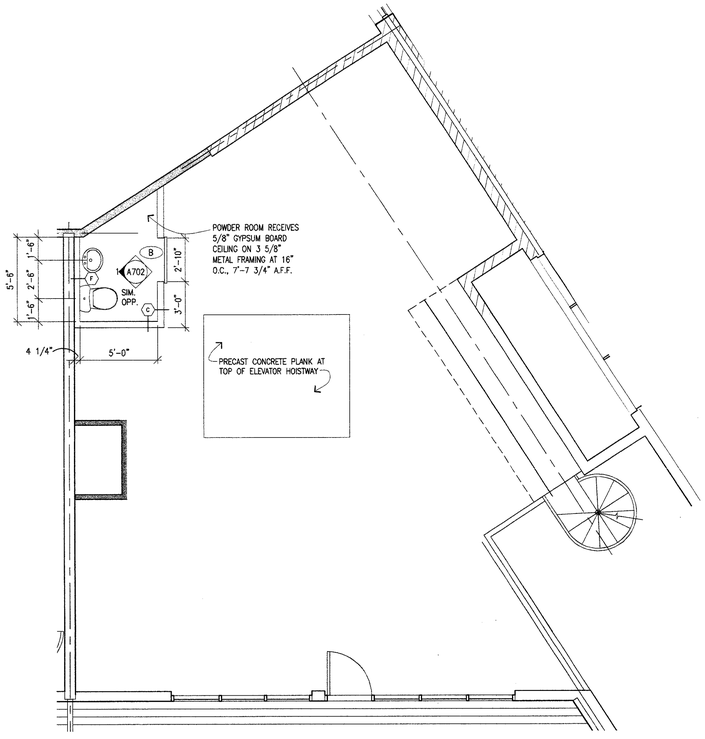

1 A204 FOURTH FLOOR PLAN POWDER ROOM ALTERNATE D
1/4"=1'-0"

NOTE:
THIS ALTERNATE IS AVAILABLE FOR UNIT 21

NEUMANN SMITH & ASSOCIATES

Architecture
Planning
Interior Design

400 Galleria Officentre
Suite 555
Southfield, Michigan 48034

248-352-8310
FAX 248-352-1821
NS@neumannsmith.com

Metro Lofts
Royal Oak, Michigan

Revisions

STATE OF MICHIGAN
JOEL LAWRENCE
LICENSED ARCHITECT

MAY 28, 2004 – ISSUED FOR BIDS
MAY 13, 2004 – ISSUED FOR MASONRY PRICING

Date
4-14-2004
Drawn
MGD
Checked
MGD
Approved
PTM
Bidpak Number

☐ Preliminary
■ Construction
☐ Record

Do not scale
Use figured dimensions only
Copyright © 2003

Job Number
23091
Title
Enlarged Unit Plans

Scale: 1/4" = 1'-0"
Sheet
A220

F:\2003\23091 - Metro Lofts\30-Construction Documents\23091A220.dwg, 5/28/2004 4:17:06 PM, pat, Xerox 510dp-scanner.pc3, 1:1, Neumann/Smith & Assoc.

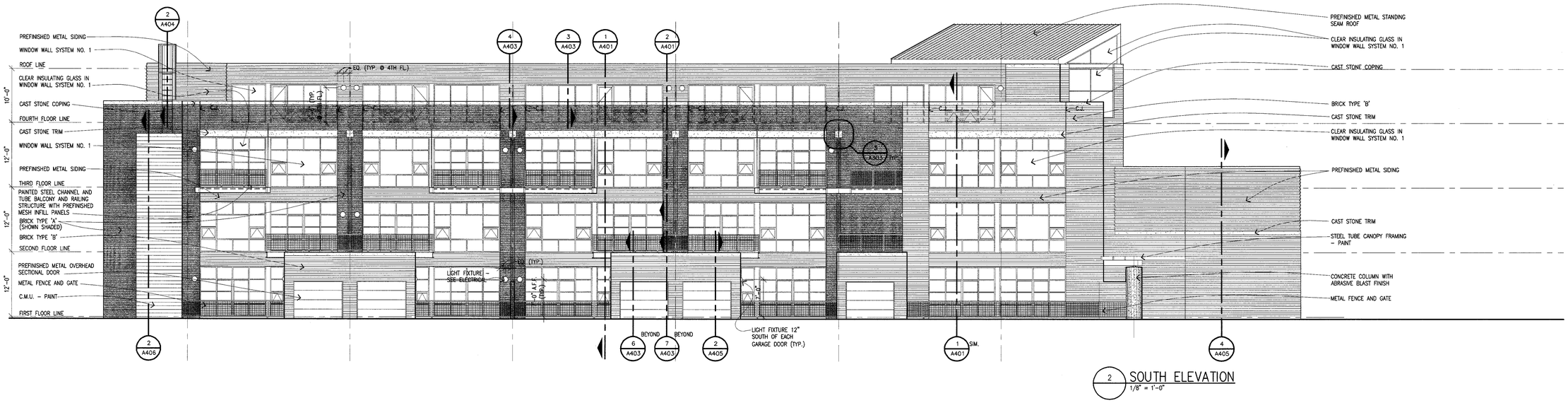

2 SOUTH ELEVATION
1/8" = 1'-0"

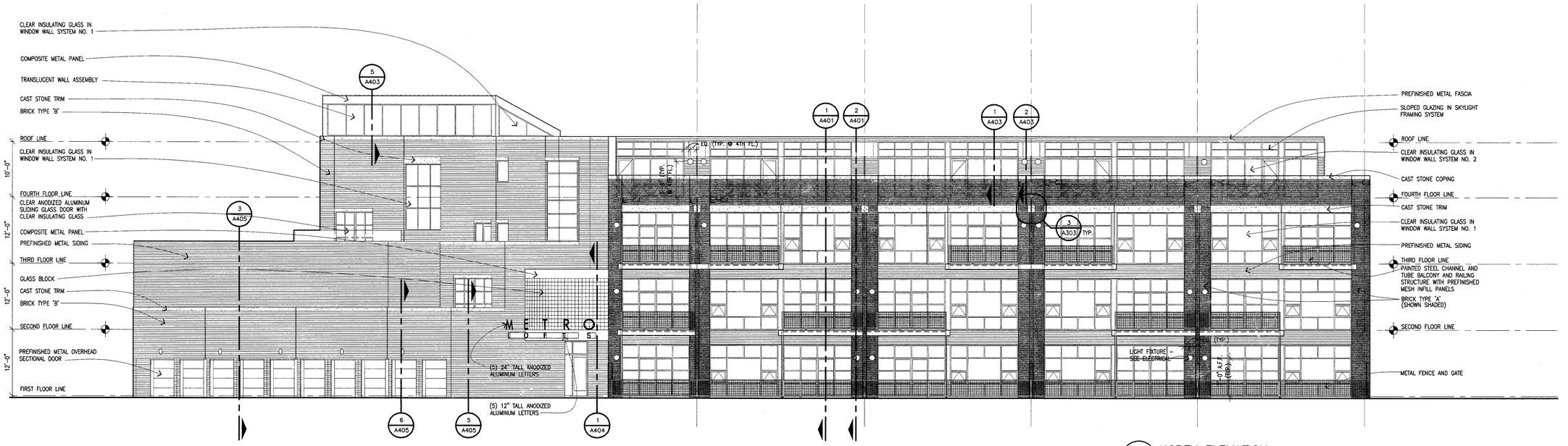

1 NORTH ELEVATION
1/8" = 1'-0"

BRICK LEGEND
- BRICK TYPE A
- BRICK TYPE B

NEUMANN SMITH & ASSOCIATES

Architecture
Planning
Interior Design

400 Galleria Officentre
Suite 555
Southfield, Michigan 48034

248-352-8310
FAX 248-352-1821
NS@neumannsmith.com

Metro Lofts
Royal Oak, Michigan

Revisions

MAY 21, 2004 - ISSUED FOR FOUNDATIONS (FOR REFERENCE ONLY)

MAY 13, 2004 - ISSUED FOR MASONRY PRICING

Date
10-8-2003
Drawn

Checked
MGD
Approved
PTM
Bidpak Number

☐ Preliminary
■ Construction
☐ Record

Do not scale
Use figured dimensions only
Copyright © 2003

Job Number
23091
Title
Building Elevations

Scale: 1/8" = 1'-0"

Sheet
A301

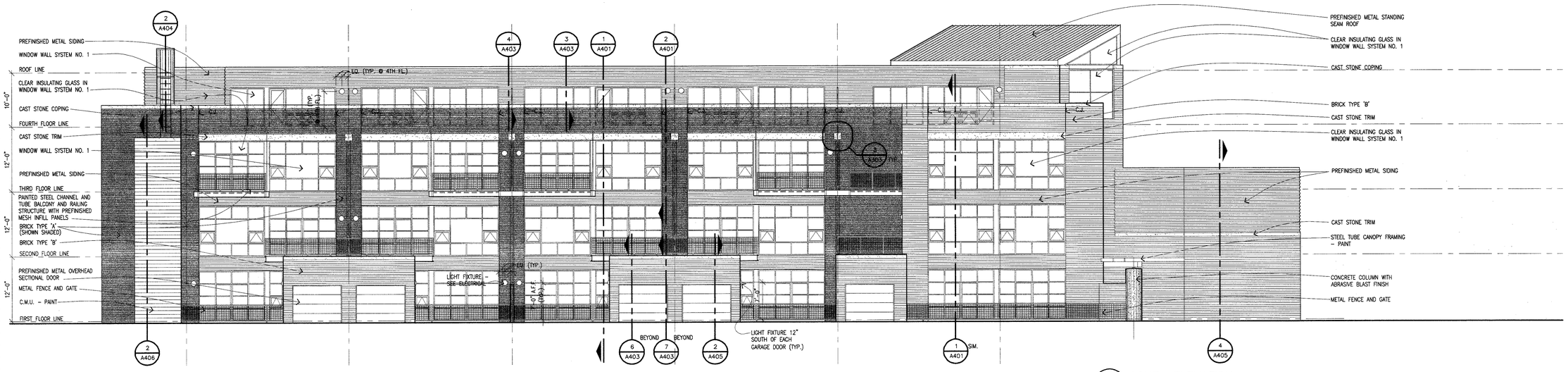

2 SOUTH ELEVATION
1/8" = 1'-0"

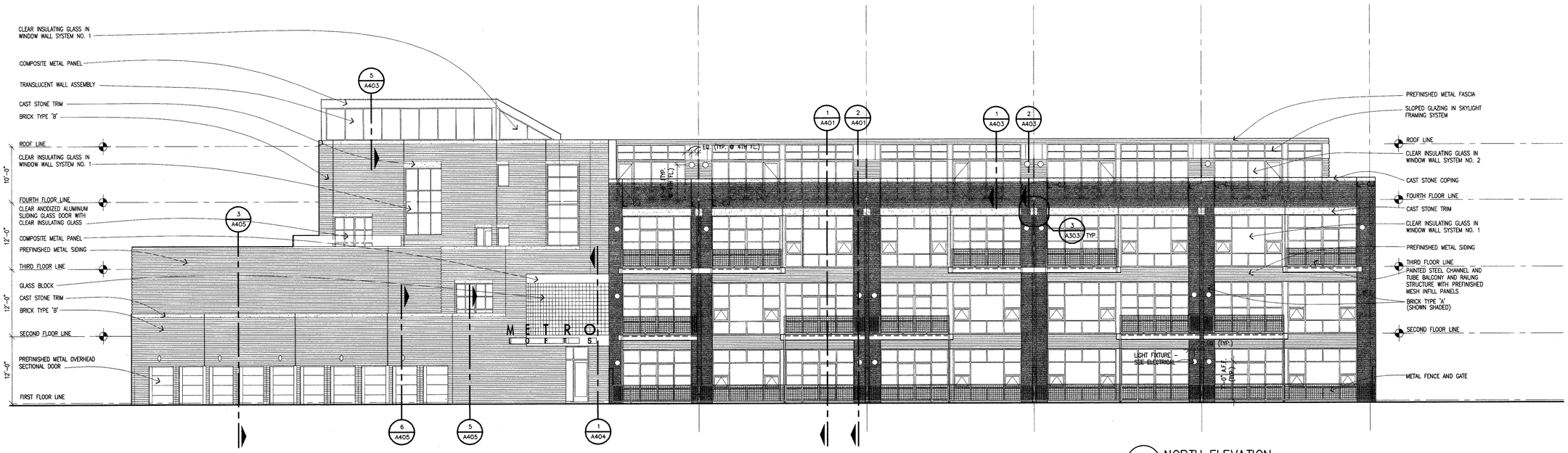

1 NORTH ELEVATION
1/8" = 1'-0"

BRICK LEGEND
- BRICK TYPE A
- BRICK TYPE B

NEUMANN SMITH & ASSOCIATES

Architecture
Planning
Interior Design

400 Galleria Officentre
Suite 555
Southfield, Michigan 48034

248-352-8310
FAX 248-352-1821
NS@neumannsmith.com

Metro Lofts
Royal Oak, Michigan

Revisions

MAY 21, 2004 - ISSUED FOR FOUNDATIONS (FOR REFERENCE ONLY)

MAY 13, 2004 - ISSUED FOR MASONRY PRICING

Date
10-8-2003
Drawn

☐ Preliminary
■ Construction
☐ Record

Checked
MGD
Approved
PTM
Bidpak Number

Do not scale
Use figured dimensions only
Copyright © 2003

Job Number
23091
Title
Building Elevations

Scale: 1/8" = 1'-0"
Sheet
A301

F:\2003\23091 - Metro Lofts\30-Construction Documents\23091A301.dwg, 5/28/2004 4:16:46 PM, pat, Xerox 510dp-scanner.pc3, 1:1, Neumann/Smith & Assoc.

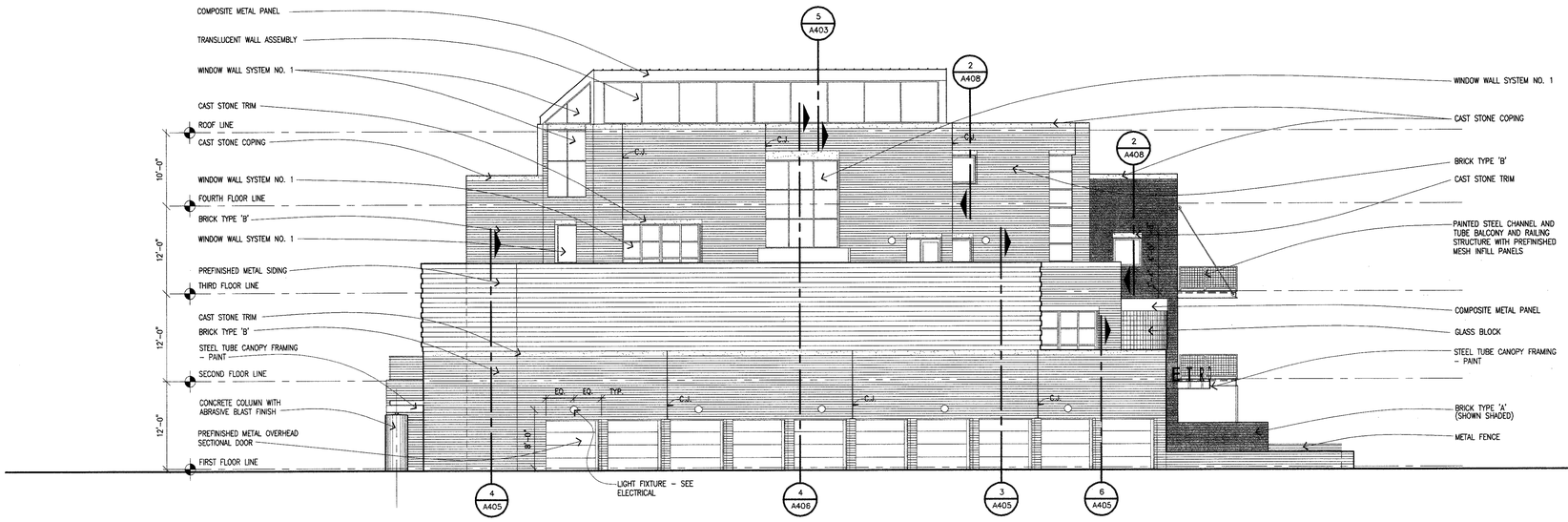

2 EAST ELEVATION
1/8" = 1'-0"

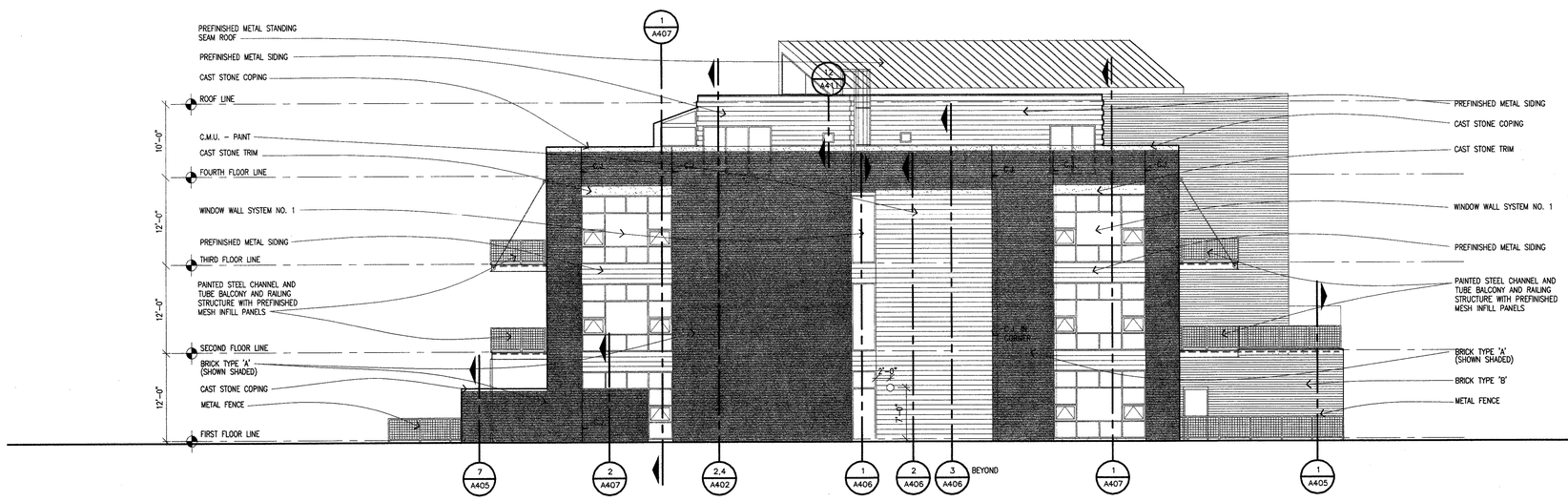

1 WEST ELEVATION
1/8" = 1'-0"

BRICK LEGEND
- BRICK TYPE A
- BRICK TYPE B

NEUMANN SMITH & ASSOCIATES

Architecture
Planning
Interior Design

400 Galleria Officentre
Suite 555
Southfield, Michigan 48034

248-352-8310
FAX 248-352-1821
NS@neumannsmith.com

Metro Lofts
Royal Oak, Michigan

Revisions

STATE OF MICHIGAN JOHN LAWRENCE SMITH ARCHITECT REGISTERED ARCHITECT

MAY 28, 2004 - ISSUED FOR BIDS

MAY 21, 2004 - ISSUED FOR FOUNDATIONS (FOR REFERENCE ONLY)

MAY 13, 2004 - ISSUED FOR MASONRY PRICING

Date
10-8-2003
Drawn

☐ Preliminary
■ Construction
☐ Record

Checked
MGD
Approved
PTM
Bidpak Number

Do not scale
Use figured dimensions only
Copyright © 2003

Job Number
23091
Title
Building Elevations

Scale: 1/8" = 1'-0"
Sheet
A302

F:\2000\23091 - Metro Lofts\30-Construction Documents\23091A302.dwg, 5/28/2004 4:16:25 PM, pat, Xerox 5100ps-scanner pc3, 1:1, Neumann/Smith & Assoc.

NEUMANN
SMITH
& ASSOCIATES

Architecture
Planning
Interior Design

400 Galleria Officentre
Suite 555
Southfield, Michigan 48034

248-352-8310
FAX 248-352-1821
NS@neumannsmith.com

Metro Lofts
Royal Oak, Michigan

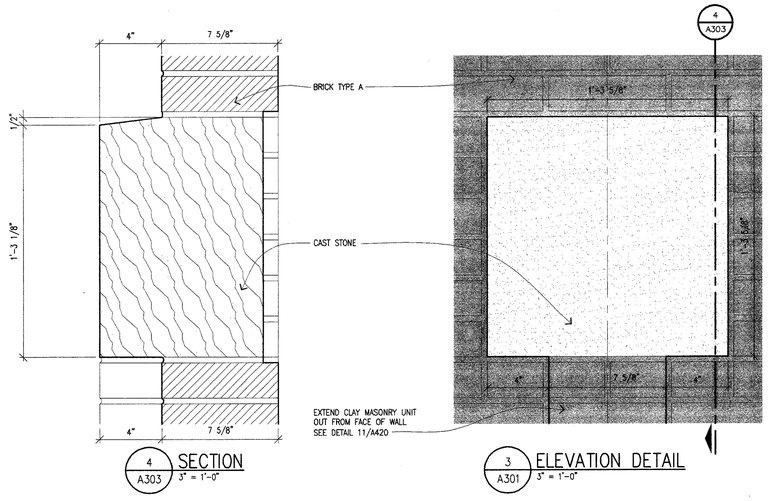

4 A303 SECTION 3" = 1'-0"

3 A301 ELEVATION DETAIL 3" = 1'-0"

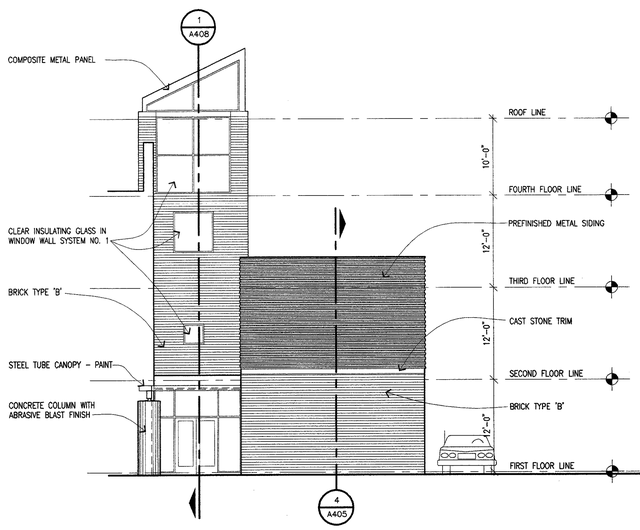

1 PARTIAL ELEVATION SOUTHEAST ELEVATION 1/8" = 1'-0"

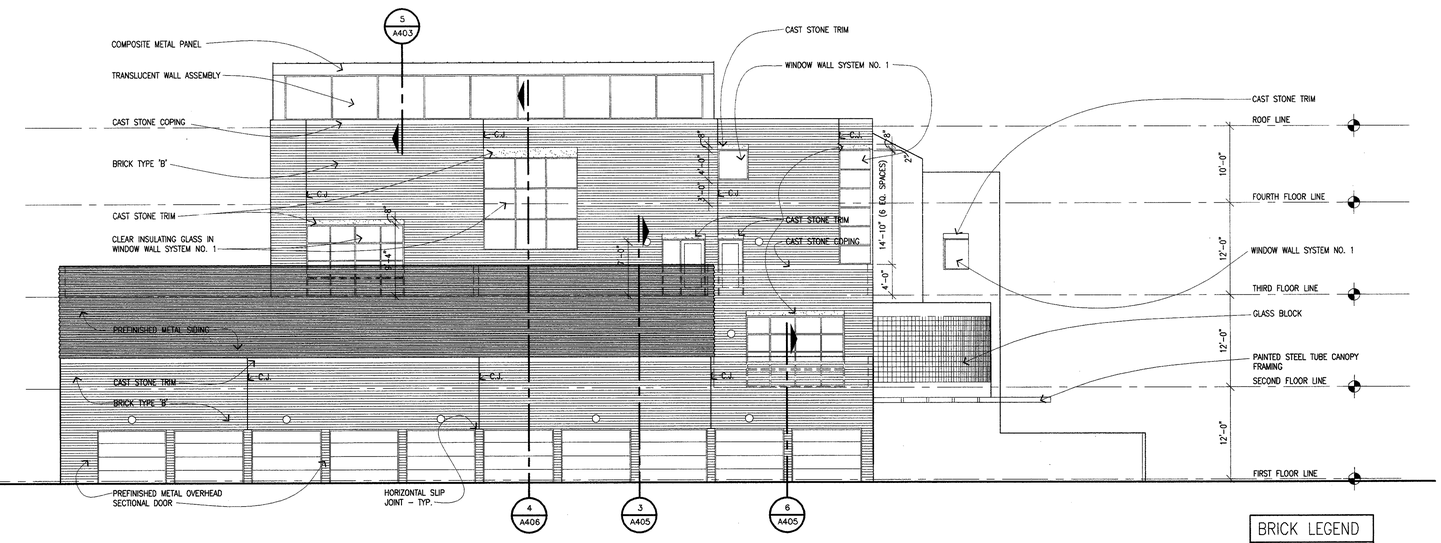

2 PARTIAL ELEVATION NORTHEAST ELEVATION 1/8" = 1'-0"

BRICK LEGEND
- BRICK TYPE A
- BRICK TYPE B

Revisions

MAY 28, 2004 – ISSUED FOR BIDS

MAY 21, 2004 – ISSUED FOR FOUNDATIONS (FOR REFERENCE ONLY)

MAY 13, 2004 – ISSUED FOR MASONRY PRICING

Date
10-8-2003
Drawn
MGD
Checked
MGD
Approved
PTM
Bidpak Number

☐ Preliminary
■ Construction
☐ Record

Do not scale
Use figured dimensions only
Copyright © 2003

Job Number
23091
Title
Building Elevations

Scale: 1/8" = 1'-0"
Sheet
A303

F:\2003\23091 - Metro Lofts\30-Construction Documents\23091A303.dwg, 9/28/2004 4:16:04 PM, pat_Xerox 5100p-scanner.pc3, 1:1, Neumann/Smith & Assoc.

NEUMANN
SMITH
& ASSOCIATES

Architecture
Planning
Interior Design

400 Galleria Officentre
Suite 555
Southfield, Michigan 48034

248-352-8310
FAX 248-352-1821
NS@neumannsmith.com

Metro Lofts
Royal Oak, Michigan

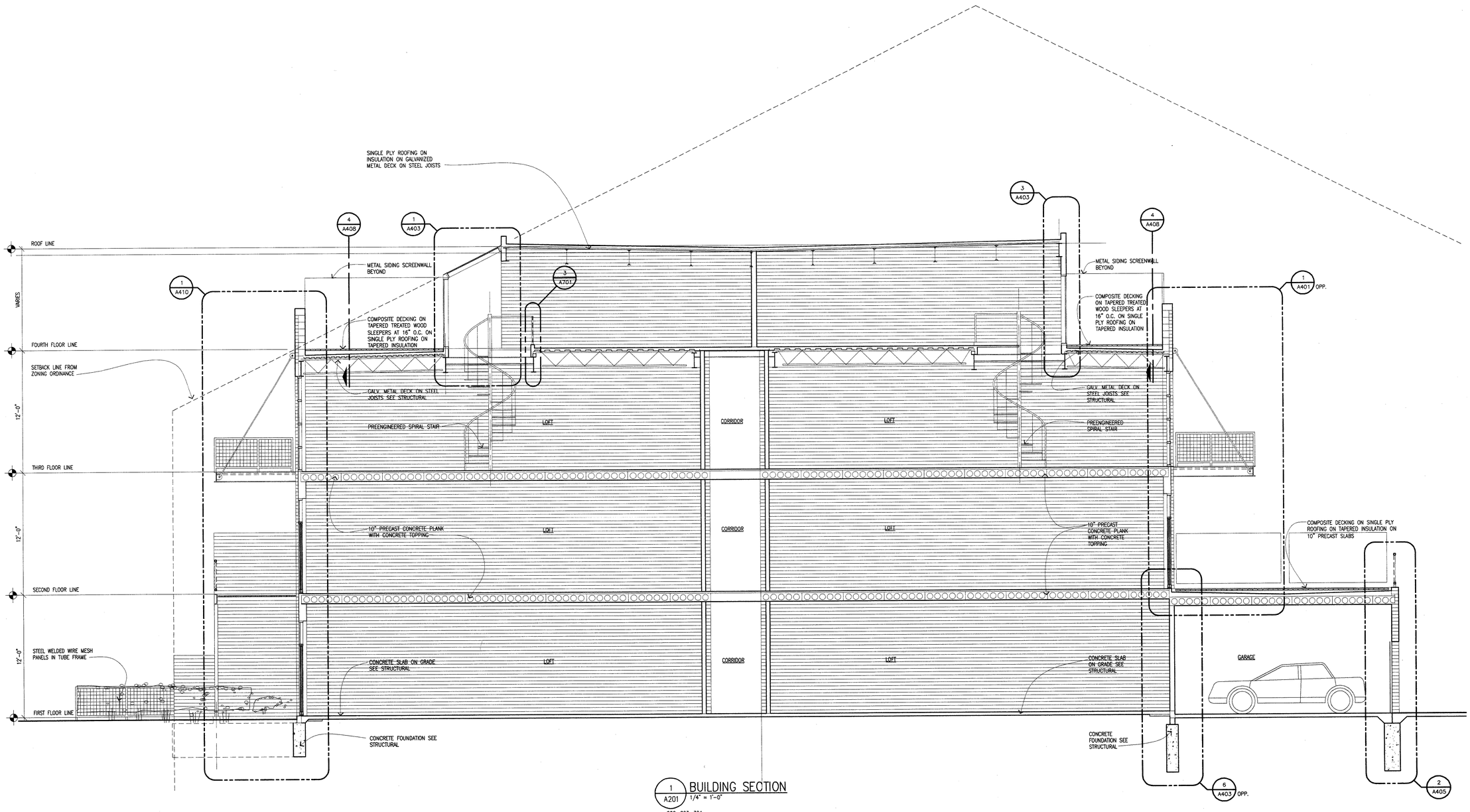

1 A201 BUILDING SECTION
1/4" = 1'-0"
202, 203, 304

Revisions

MAY 28, 2004 – ISSUED FOR BIDS

MAY 21, 2004 – ISSUED FOR FOUNDATIONS (FOR REFERENCE ONLY)

MAY 13, 2004 – ISSUED FOR MASONRY PRICING

Date
10-8-2003
Drawn
PTM
Checked
MGD
Approved
PTM
Bidpak Number

☐ Preliminary
■ Construction
☐ Record

Do not scale
Use figured dimensions only
Copyright © 2003

Job Number
23091
Title
Cross Section

Scale: 1/4" = 1'-0"

Sheet
A310

F:\2003\23091 - Metro Lofts\30-Construction Documents\23091A310.dwg, 5/28/2004 4:15:41 PM, pat_Xerox 5100p-scanner.pc3, 1:1, Neumann/Smith & Assoc.

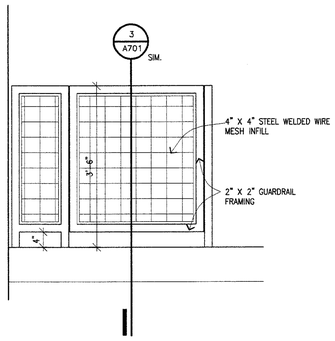

7 A311 GATE ELEVATION
3/4"=1'-0"

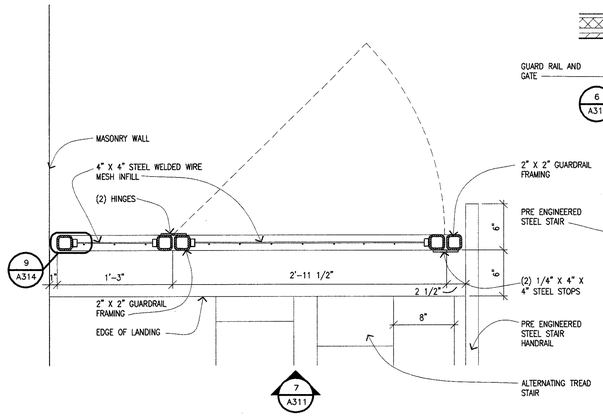

6 A311 PLAN DETAIL AT GATE
1 1/2"=1'-0"

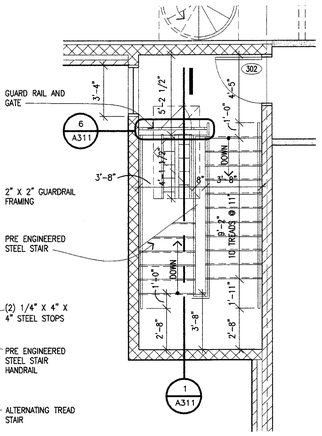

5 A203 THIRD FLOOR ENLARGED STAIR PLAN
1/4"=1'-0"

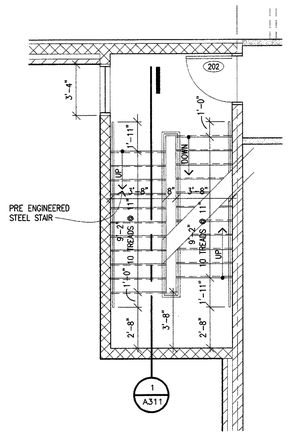

4 A202 SECOND FLOOR ENLARGED STAIR PLAN
1/4"=1'-0"

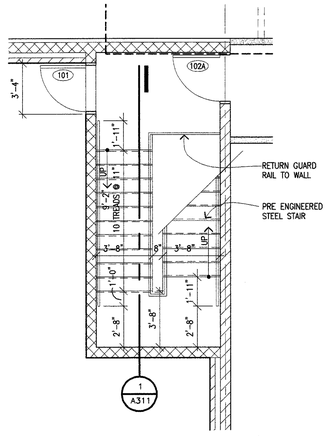

3 A201 FIRST FLOOR ENLARGED STAIR PLAN
1/4"=1'-0"

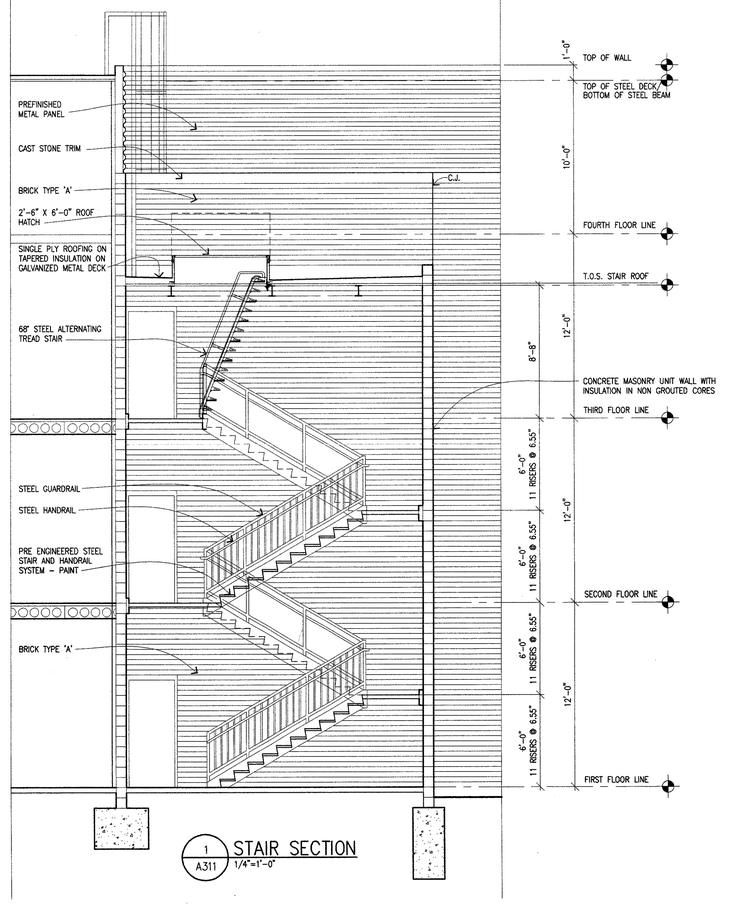

1 A311 STAIR SECTION
1/4"=1'-0"

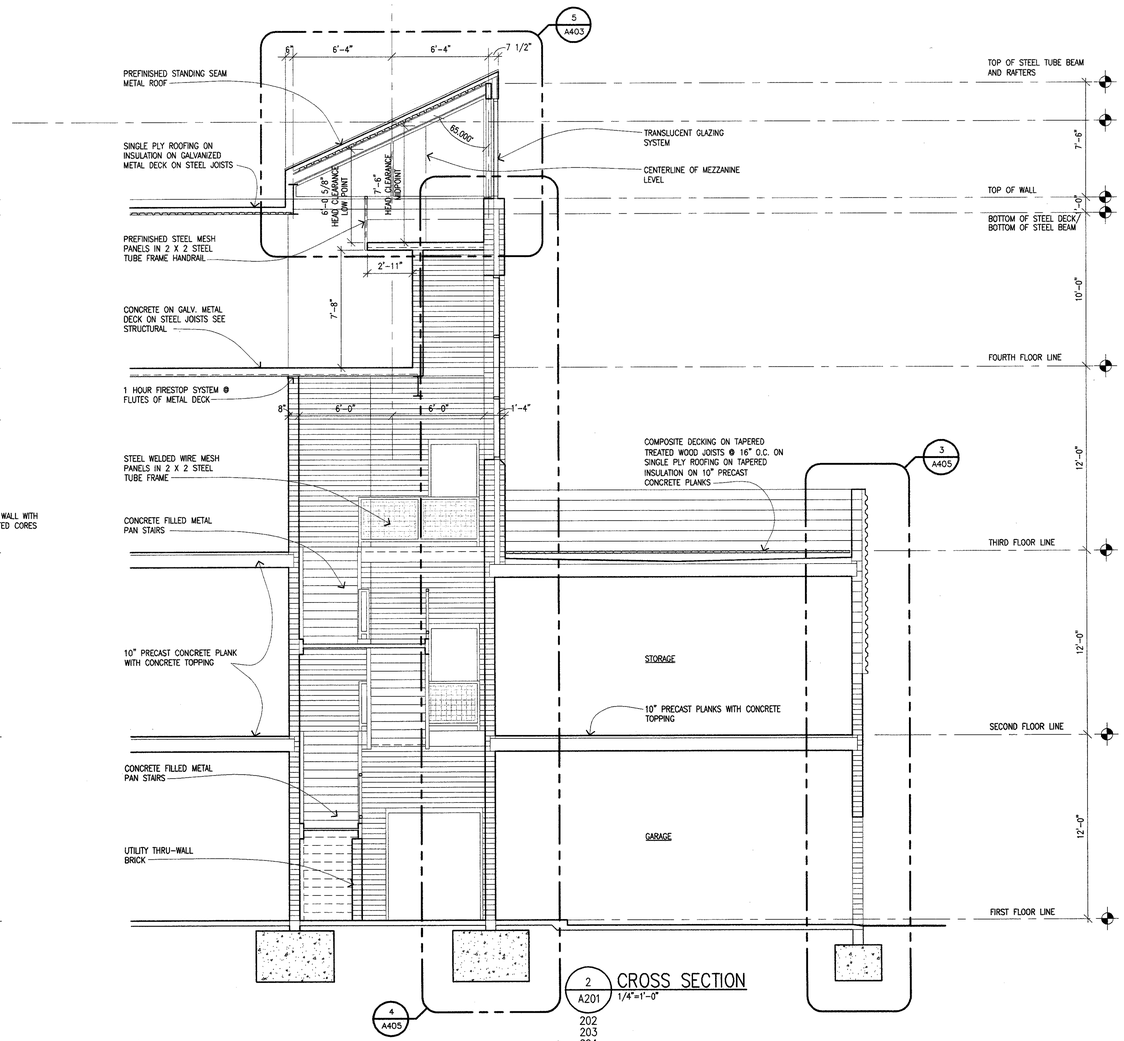

2 A201 CROSS SECTION
1/4"=1'-0"

202
203
204

NEUMANN SMITH & ASSOCIATES

Architecture
Planning
Interior Design

400 Galleria Officentre
Suite 555
Southfield, Michigan 48034

248-352-8310
FAX 248-352-1821
NS@neumannsmith.com

Metro Lofts
Royal Oak, Michigan

Revisions

STATE OF MICHIGAN — MICHAEL LAWRENCE SCHEFFLER — REGISTERED ARCHITECT

MAY 28, 2004 – ISSUED FOR BIDS

MAY 21, 2004 – ISSUED FOR FOUNDATIONS (FOR REFERENCE ONLY)

MAY 13, 2004 – ISSUED FOR MASONRY PRICING

Date
4-1-2004
Drawn
PTM
Checked
MGD
Approved
PTM
Bidpak Number

☐ Preliminary
■ Construction
☐ Record

Do not scale
Use figured dimensions only
Copyright © 2003

Job Number
23091
Title
Cross Section at Stair

Scale: 1/4" = 1'-0"
Sheet
A311

F:\2003\23091 - Metro Lofts\30-Construction Documents\23091A311.dwg, 5/28/2004 4:15:19 PM, pat, Xerox 5104ip-scanner.pc3, 1:1, NeumannSmith & Assoc.

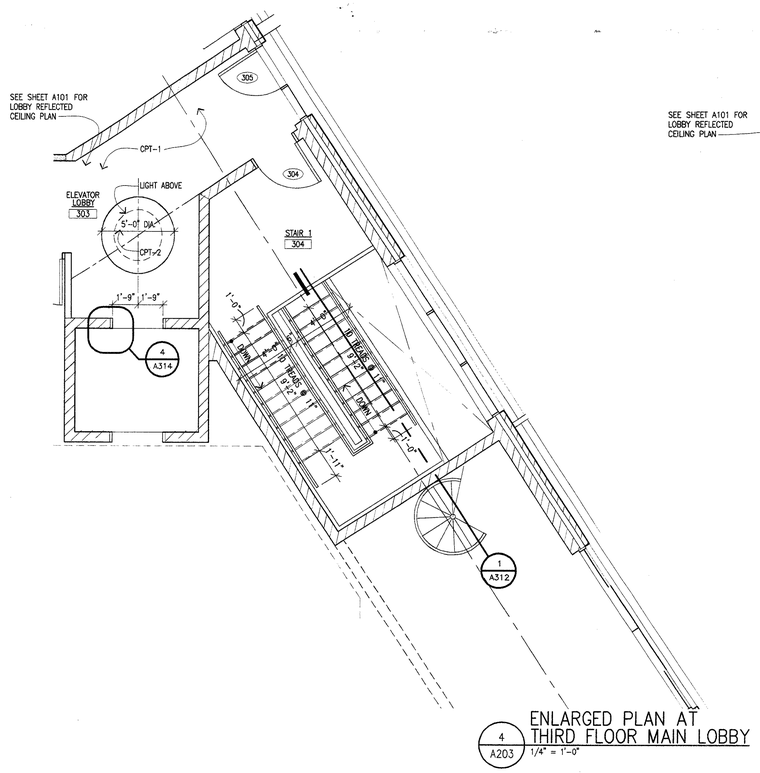

4 A203 ENLARGED PLAN AT THIRD FLOOR MAIN LOBBY
1/4" = 1'-0"

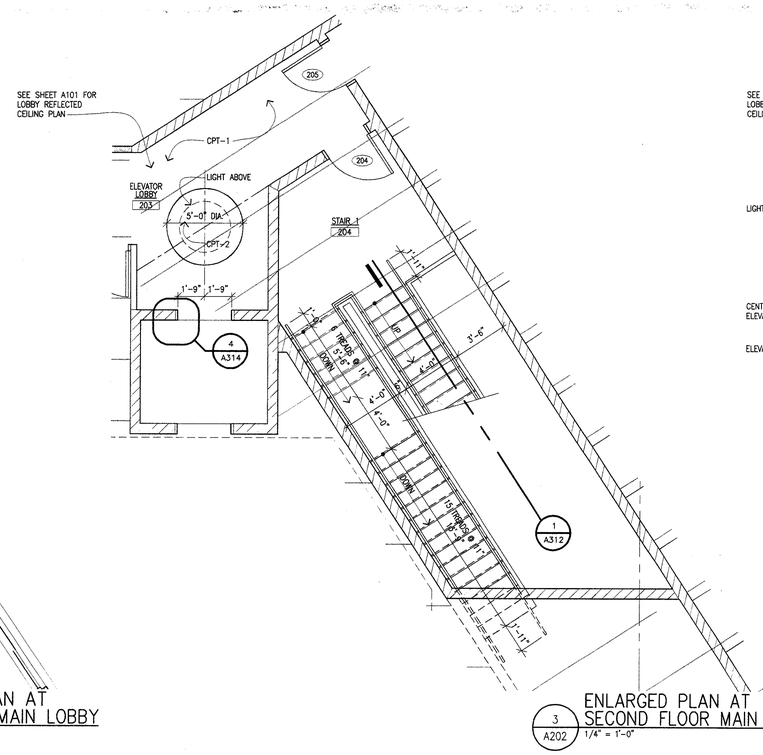

3 A202 ENLARGED PLAN AT SECOND FLOOR MAIN LOBBY
1/4" = 1'-0"

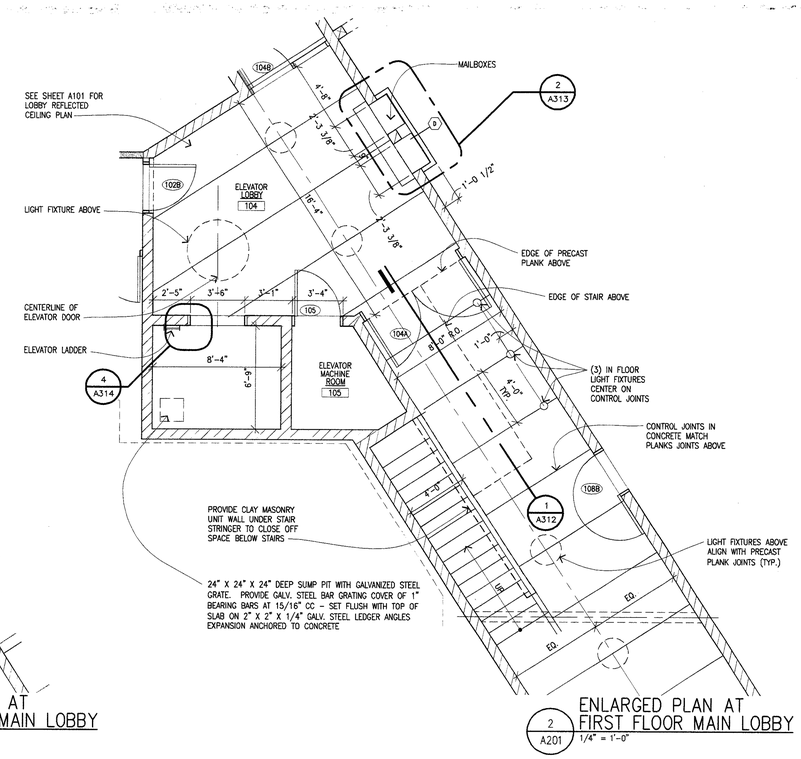

2 A201 ENLARGED PLAN AT FIRST FLOOR MAIN LOBBY
1/4" = 1'-0"

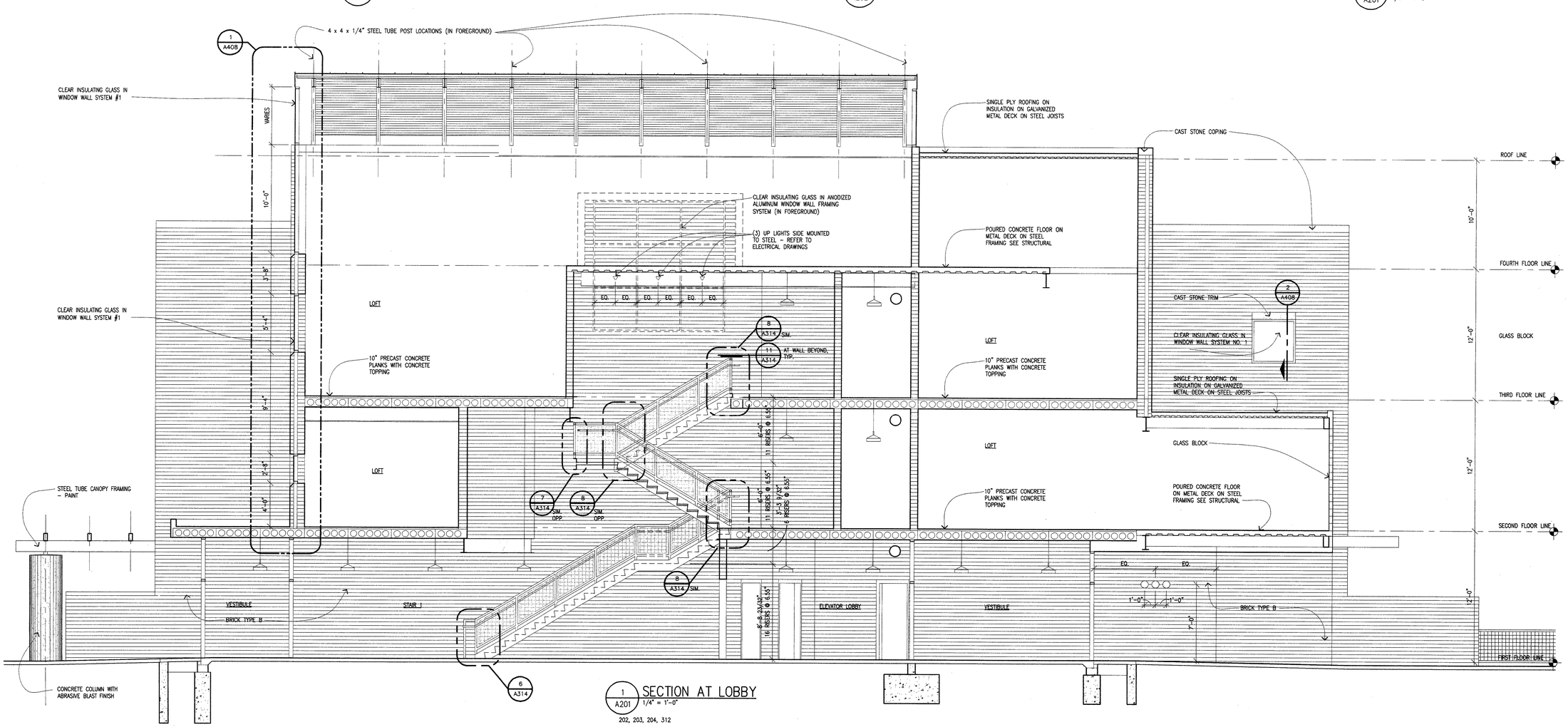

1 A201 SECTION AT LOBBY
1/4" = 1'-0"
202, 203, 204, 312

NEUMANN SMITH & ASSOCIATES

Architecture
Planning
Interior Design

400 Galleria Officentre
Suite 555
Southfield, Michigan 48034

248-352-8310
FAX 248-352-1821
NS@neumannsmith.com

Metro Lofts
Royal Oak, Michigan

Revisions

STATE OF MICHIGAN PATRICK T. MCGOWAN REGISTERED ARCHITECT

MAY 28, 2004 – ISSUED FOR BIDS

MAY 21, 2004 – ISSUED FOR FOUNDATIONS (FOR REFERENCE ONLY)

MAY 13, 2004 – ISSUED FOR MASONRY PRICING

Date
4-1-2004
Drawn
PTM
Checked
MGD
Approved
PTM
Bidpak Number

☐ Preliminary
■ Construction
☐ Record

Do not scale
Use figured dimensions only
Copyright © 2003

Job Number
23091
Title
Section at Lobby

Scale: 1/4" = 1'-0"
Sheet
A312

F:\2003\23091 - Metro Lofts\30-Construction Documents\23091A312.dwg, 5/28/2004 4:14:55 PM, pat, Xerox 510dp-scanner.pc3, 1:1, Neumann/Smith & Assoc.

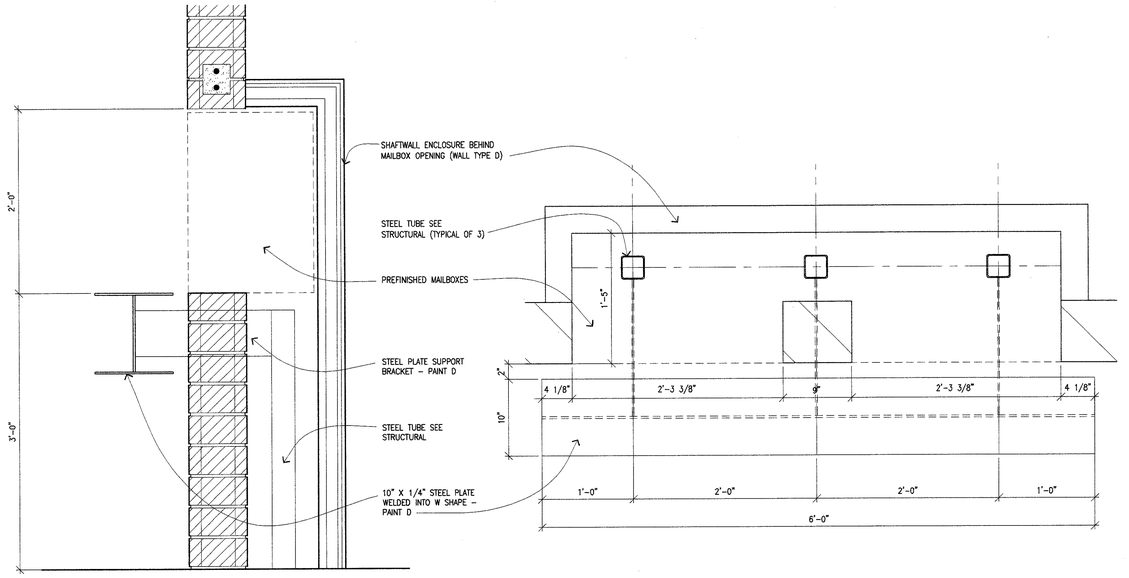

3 / A313 SECTION DETAIL AT MAILBOXES
1 1/2" = 1'-0"

2 / A312 PLAN DETAIL AT MAILBOXES
1 1/2" = 1'-0"

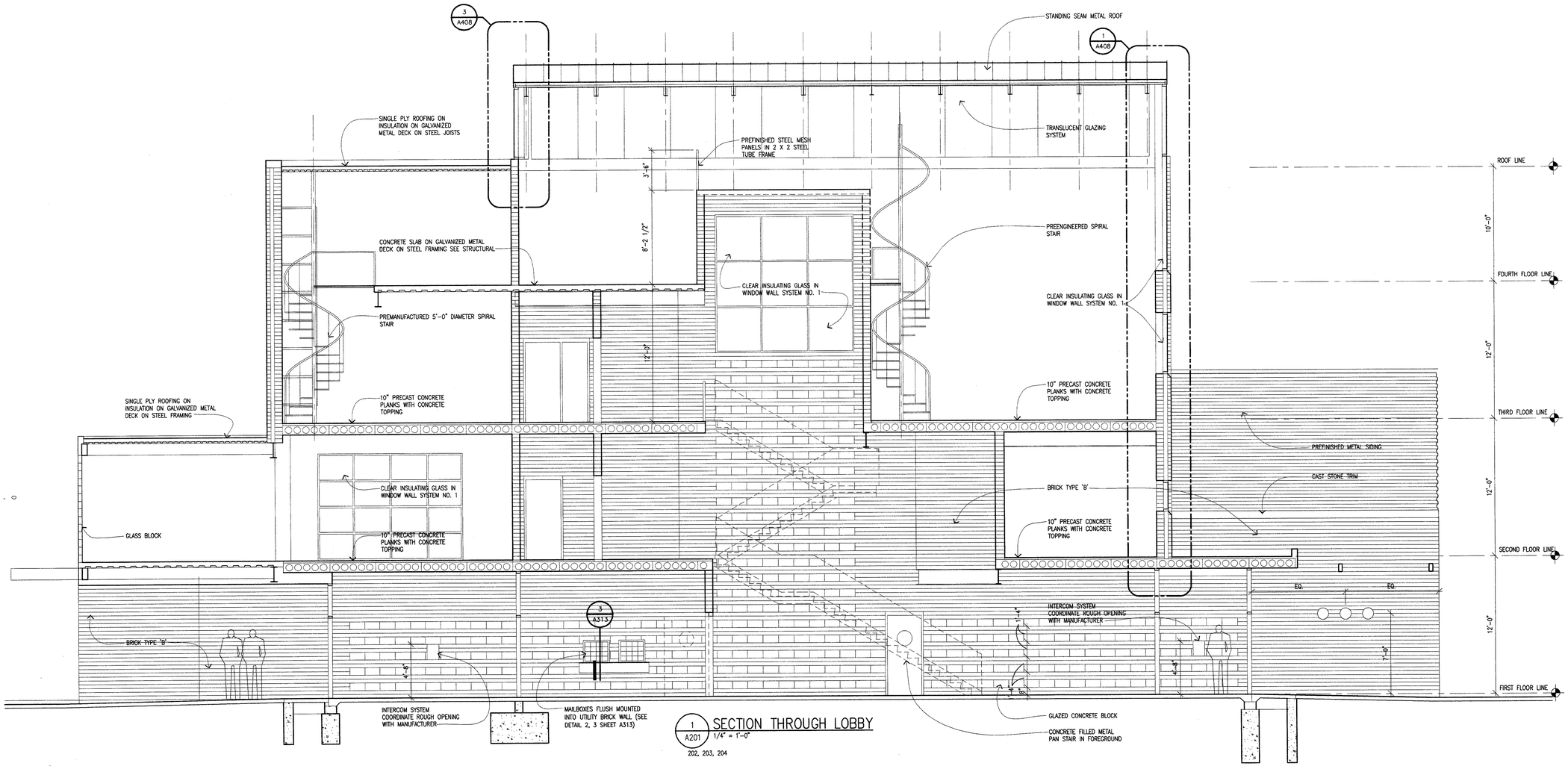

1 / A201 SECTION THROUGH LOBBY
1/4" = 1'-0"
202, 203, 204

NEUMANN SMITH & ASSOCIATES

Architecture
Planning
Interior Design

400 Galleria Officentre
Suite 555
Southfield, Michigan 48034

248-352-8310
FAX 248-352-1821
NS@neumannsmith.com

Metro Lofts
Royal Oak, Michigan

Revisions

STATE OF MICHIGAN — ANTHONY M. SMITH — ARCHITECT — REGISTERED ARCHITECT

MAY 28, 2004 – ISSUED FOR BIDS

MAY 21, 2004 – ISSUED FOR FOUNDATIONS (FOR REFERENCE ONLY)

MAY 13, 2004 – ISSUED FOR MASONRY PRICING

Date
4-1-2004
Drawn
PTM
Checked
MGD
Approved
PTM
Bidpak Number

☐ Preliminary
■ Construction
☐ Record

Do not scale
Use figured dimensions only
Copyright © 2003

Job Number
23091
Title
Section at Lobby

Scale: 1/4" = 1'-0"
Sheet
A313

F:\2003\23091 - Metro Lofts\3b-Construction Documents\23091A313.dwg, 5/28/2004 4:14:22 PM, pat, Xerox 5100p scanner.pc3, 1:1, Neumann/Smith & Assoc.

STAIR GENERAL NOTES

1. ALL WELDS SHALL BE CONTINUOUS AND GROUND SMOOTH
2. GRIND ALL SHARP EDGES, INCLUDING EDGES OF PUNCHED MATERIAL PRIOR TO FINISHING
3. ALL EXPOSED STAIR CONSTRUCTION IS PAINTED (PAINT-D), INCLUDING STRINGERS, CHANNELS, WIRE MESH, PLATES, HANDRAILS, GUARDRAILS, RISERS ETC.

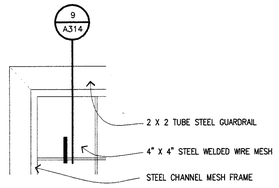

13 A314 ELEVATION DETAIL 3"=1'-0"

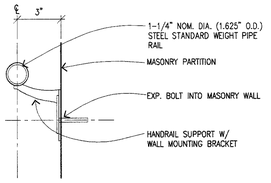

12 A314 SECTION DETAIL 3"=1'-0"

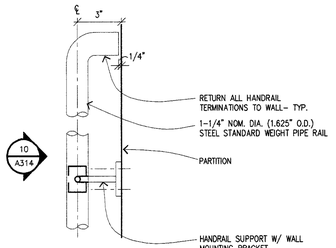

10 A314

11 A312 PLAN DETAIL 3"=1'-0"

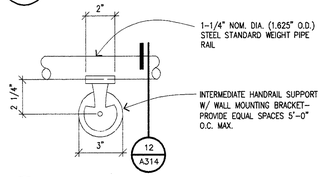

10 A314 ELEVATION DETAIL 3"=1'-0"

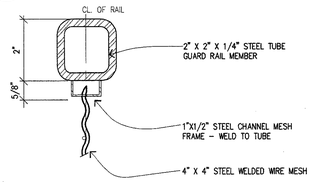

9 A311 SECTION DETAIL 6"=1'-0"

314

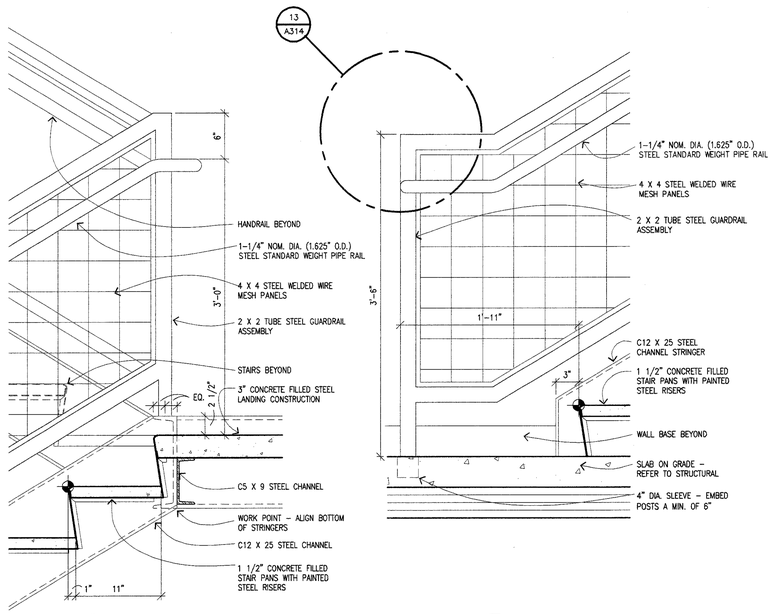

8 A312 SECTION 1 1/2"=1'-0"

6 A312 SECTION 1 1/2"=1'-0"

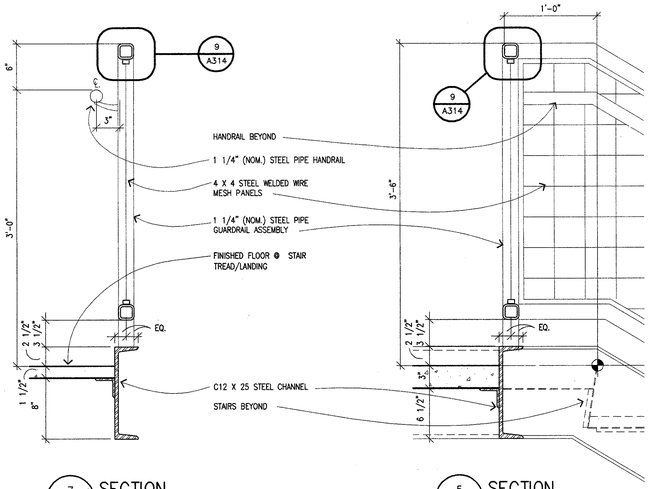

7 A312 SECTION 1 1/2"=1'-0"

5 A312 SECTION 1 1/2"=1'-0"

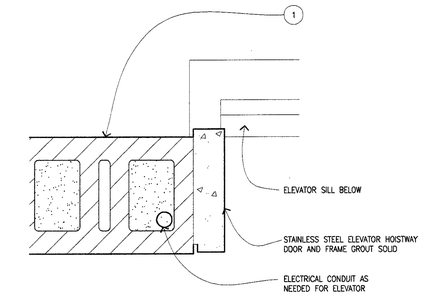

4 A213 ELEVATOR JAMB DETAIL 1 1/2" = 1'-0"

215, 314

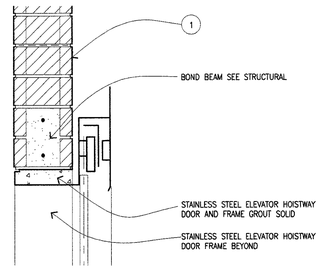

3 A314 ELEVATOR HEAD DETAIL 1 1/2" = 1'-0"

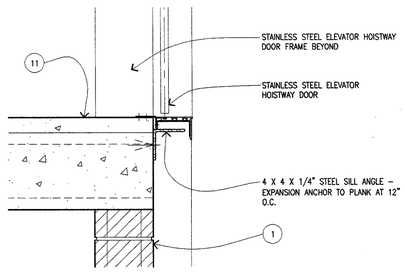

2 A314 ELEVATOR SILL DETAIL 1 1/2" = 1'-0"

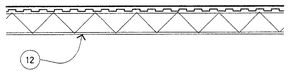

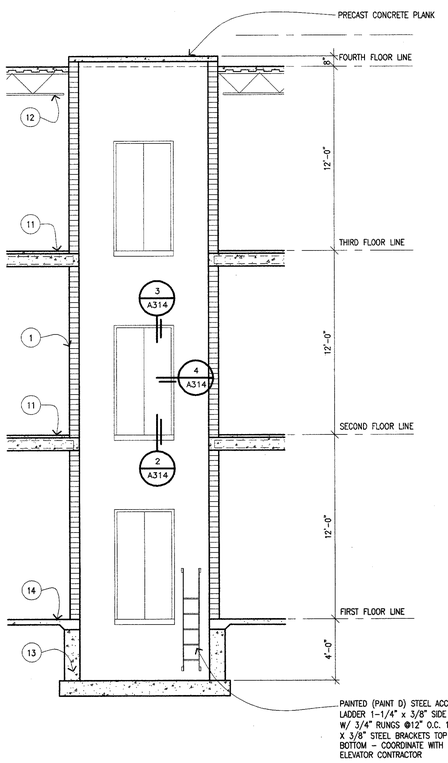

1 A201 SECTION 1/4" = 1'-0"

202, 203, 204

NEUMANN SMITH & ASSOCIATES

Architecture
Planning
Interior Design

400 Galleria Officentre
Suite 555
Southfield, Michigan 48034

248-352-8310
FAX 248-352-1821
NS@neumannsmith.com

Metro Lofts

Royal Oak, Michigan

KEYNOTES

1 UTILITY BRICK THROUGH-WALL UNIT WITH GALVANIZED HORIZONTAL WALL REINFORCING AT 16" O.C. VERTICAL - REFER TO STRUCTURAL DRAWINGS FOR VERTICAL REINFORCING AND GROUTING OF CORES.

2 UTILITY BRICK VENEER WITH ADJUSTABLE GALVANIZED BRICK TIES + AIR SPACE + 2" RIGID INSULATION.

3 PREFINISHED METAL SIDING ON METAL SUBGRT SYSTEM OVER AIR INFILTRATION BARRIER OVER 1/2" EXTERIOR GYPSUM SHEATHING + 6" COLD FORMED METAL FRAMING AT 16" O.C. + 6" BLANKET INSULATION + VAPOR RETARDER + 5/8" GYPSUM BOARD INTERIOR FINISH.

4 CAST STONE

5 CLEAR INSULATING VISION GLASS IN WINDOW WALL SYSTEM NO. 1.

6 CLEAR ANODIZED ALUMINUM SLIDING GLASS DOOR UNIT WITH FIXED TRANSOM WITH CLEAR INSULATING VISION GLASS.

7 SINGLE PLY EPDM MEMBRANE ROOFING FULLY ACHERED OVER TWO LAYERS (MIN.) OF POLYISOCYANURATE INSULATION MECHANICALLY FASTENED TO ROOF DECK.

8 SEALANT + BACKER ROD.

9 2" X 24" PERIMETER INSULATION

10 1/2" PREMOLDED JOINT FILLER + SEALANT

11 PRECAST CONCRETE PLANK WITH CONCRETE TOPPING

12 REFER TO STRUCTURAL DRAWINGS FOR DETAILS AND NOTES RELATING TO STEEL COLUMNS, BEAMS, JOISTS, BENT PLATES, ANGLES, OTHER STEEL SHAPES, CONCRETE ON METAL DECK FLOOR SYSTEMS AND ROOF DECK.

13 CONCRETE FOOTING/GRADE BEAM - REFER TO STRUCTURAL DRAWINGS FOR NOTES AND DETAILS.

14 CONCRETE FLOOR SLAB OVER VAPOR RETARDER ON COMPACTED GRANULAR FILL - REFER TO STRUCTURAL DRAWINGS FOR THICKNESS, REINFORCING AND RELATED NOTES AND DETAILS.

15 5/8" GYPSUM BOARD + VAPOR RETARDER ON 2" 'Z' FURRING SYSTEM WITH 2" RIGID INSULATION.

Revisions

STATE OF MICHIGAN - JAMES M. SMITH - REGISTERED ARCHITECT

MAY 28, 2004 - ISSUED FOR BIDS

MAY 21, 2004 - ISSUED FOR FOUNDATIONS (FOR REFERENCE ONLY)

MAY 13, 2004 - ISSUED FOR MASONRY PRICING

Date
4-1-2004
Drawn
MGD
Checked
MGD
Approved
PTM
Bidpak Number

☐ Preliminary
■ Construction
☐ Record

Do not scale
Use figured dimensions only
Copyright © 2003

Job Number
23091
Title
Elevator Section

Scale: 1/4" = 1'-0"

Sheet
A314

F:\2003\23091 - Metro Lofts\3b-Construction Document\23091A314.dwg, 5/28/2004 4:13:40 PM, pat, Xerox 5100dp scanner pc3, 1:1, Neumann/Smith & Assoc.

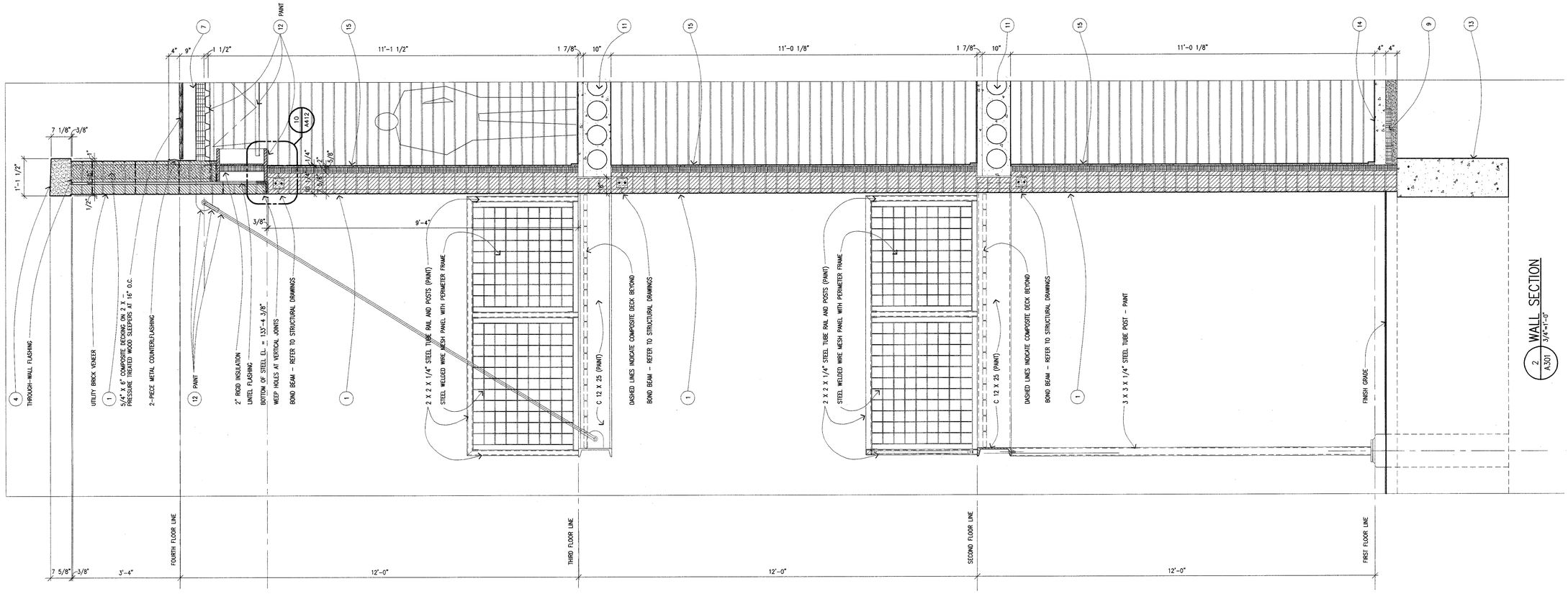

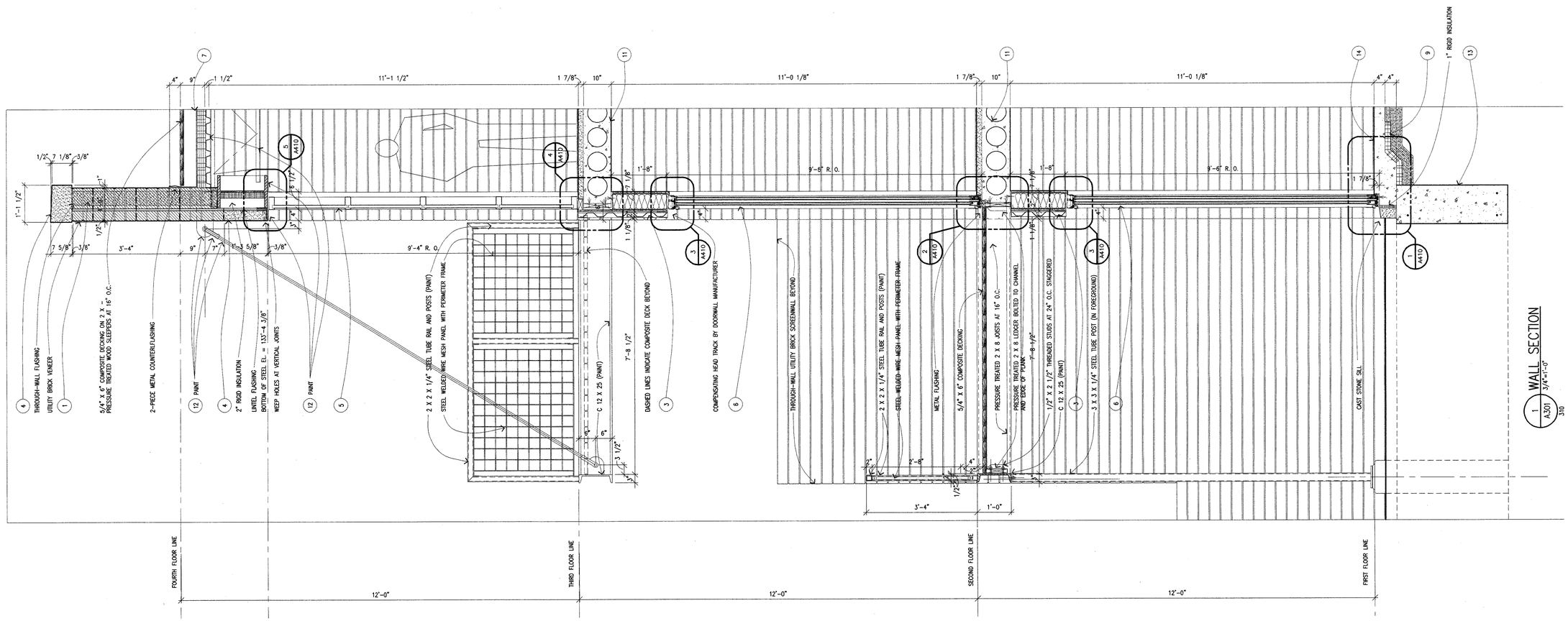

NEUMANN SMITH & ASSOCIATES

Architecture
Planning
Interior Design

400 Galleria Officentre
Suite 555
Southfield, Michigan 48034

248-352-8310
FAX 248-352-1821
NS@neumannsmith.com

Metro Lofts

Royal Oak, Michigan

KEYNOTES

1 UTILITY BRICK THROUGH-WALL UNIT WITH GALVANIZED HORIZONTAL WALL REINFORCING AT 16" O.C. VERTICAL - REFER TO STRUCTURAL DRAWINGS FOR VERTICAL REINFORCING AND GROUTING OF CORES.

2 UTILITY BRICK VENEER WITH ADJUSTABLE GALVANIZED BRICK TIES + AIR SPACE + 2" RIGID INSULATION.

3 PREFINISHED METAL SIDING ON METAL SUBGIRT SYSTEM OVER AIR INFILTRATION BARRIER OVER 1/2" EXTERIOR GYPSUM SHEATHING + 6" COLD FORMED METAL FRAMING AT 16" O.C. + 3" BLANKET INSULATION + VAPOR RETARDER + 5/8" GYPSUM BOARD INTERIOR FINISH.

4 CAST STONE

5 CLEAR INSULATING VISION GLASS IN WINDOW WALL SYSTEM NO. 1.

6 CLEAR ANODIZED ALUMINUM SLIDING GLASS DOOR UNIT WITH FIXED TRANSOM WITH CLEAR INSULATING VISION GLASS.

7 SINGLE PLY EPDM MEMBRANE ROOFING FULLY ADHERED OVER TWO LAYERS (MIN.) OF POLYISOCYANURATE INSULATION MECHANICALLY FASTENED TO ROOF DECK.

8 SEALANT + BACKER ROD.

9 2" X 24" PERIMETER INSULATION

10 1/2" PREMOLDED JOINT FILLER + SEALANT

11 PRECAST CONCRETE PLANK WITH CONCRETE TOPPING

12 REFER TO STRUCTURAL DRAWINGS FOR DETAILS AND NOTES RELATING TO STEEL COLUMNS, BEAMS, JOISTS, BENT PLATES, ANGLES, OTHER STEEL SHAPES, CONCRETE ON METAL DECK FLOOR SYSTEMS AND ROOF DECK.

13 CONCRETE FOOTING/GRADE BEAM - REFER TO STRUCTURAL DRAWINGS FOR NOTES AND DETAILS.

14 CONCRETE FLOOR SLAB OVER VAPOR RETARDER ON COMPACTED GRANULAR FILL - REFER TO STRUCTURAL DRAWINGS FOR THICKNESS, REINFORCING AND RELATED NOTES AND DETAILS.

15 5/8" GYPSUM BOARD + VAPOR RETARDER ON 2" 'Z' FURRING SYSTEM WITH 2" RIGID INSULATION.

Revisions

STATE OF MICHIGAN — JOHN T. SMITH — ARCHITECT

MAY 28, 2004 - ISSUED FOR BIDS
MAY 13, 2004 - ISSUED FOR MASONRY PRICING

Date
4-5-2004
Drawn
PTM
Checked
MGD
Approved
PTM
Biopak Number

☐ Preliminary
■ Construction
☐ Record

Do not scale
Use figured dimensions only
Copyright © 2003

Job Number
23091

Title
Wall Sections

Scale: 3/4" = 1'-0"

Sheet
A401

F:\2003\23091 - Metro Lofts\Sk-Construction Documents\23091A401.dwg, 5/28/2004 4:13:14 PM, pat, Xerox 5104p scanner pc3, 1:1, Neumann/Smith & Assoc.

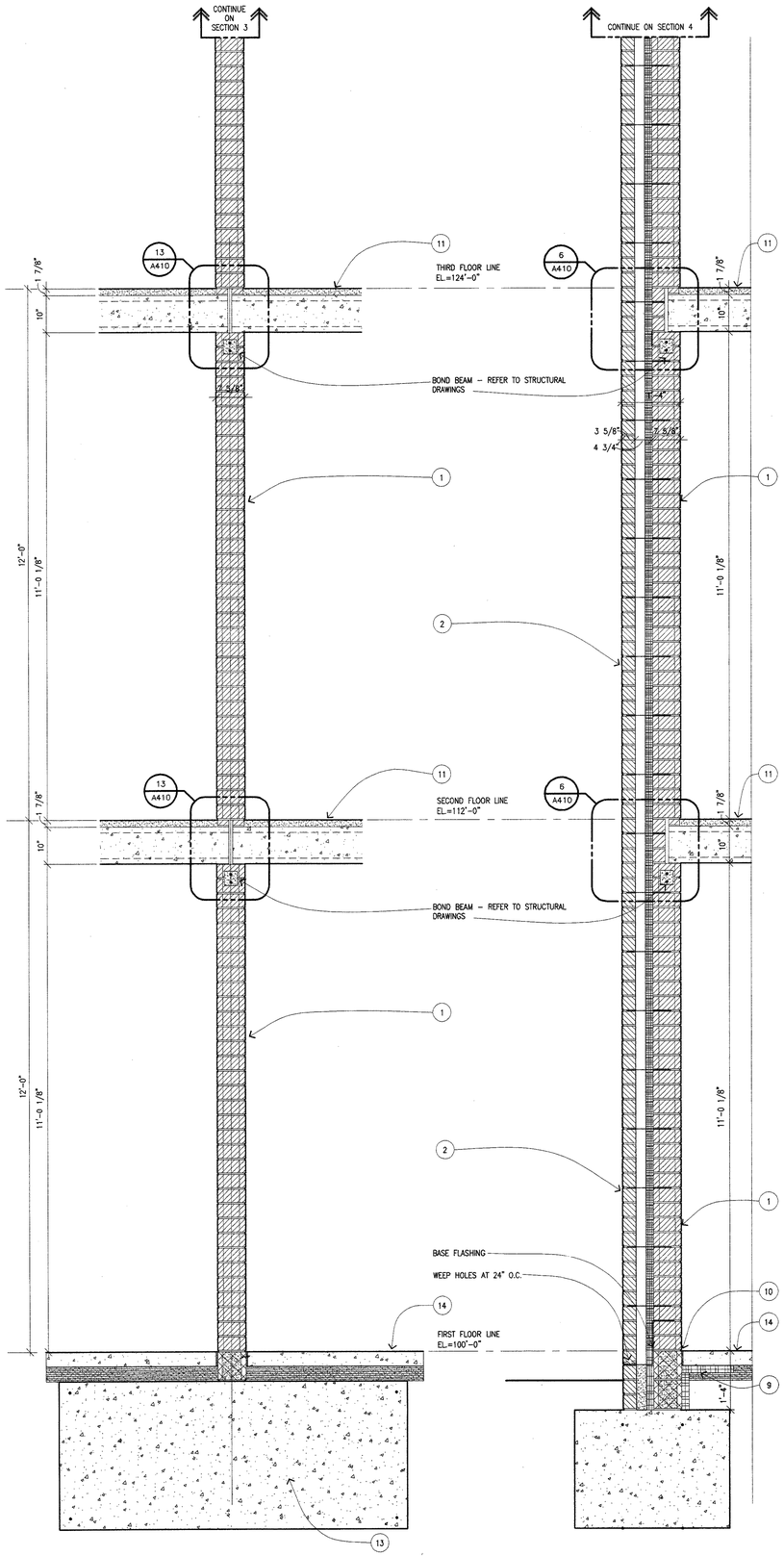

1 A201 WALL SECTION 3/4"=1'-0"

202, 210, 211, 212, 213, 218

2 A302 WALL SECTION 3/4"=1'-0"

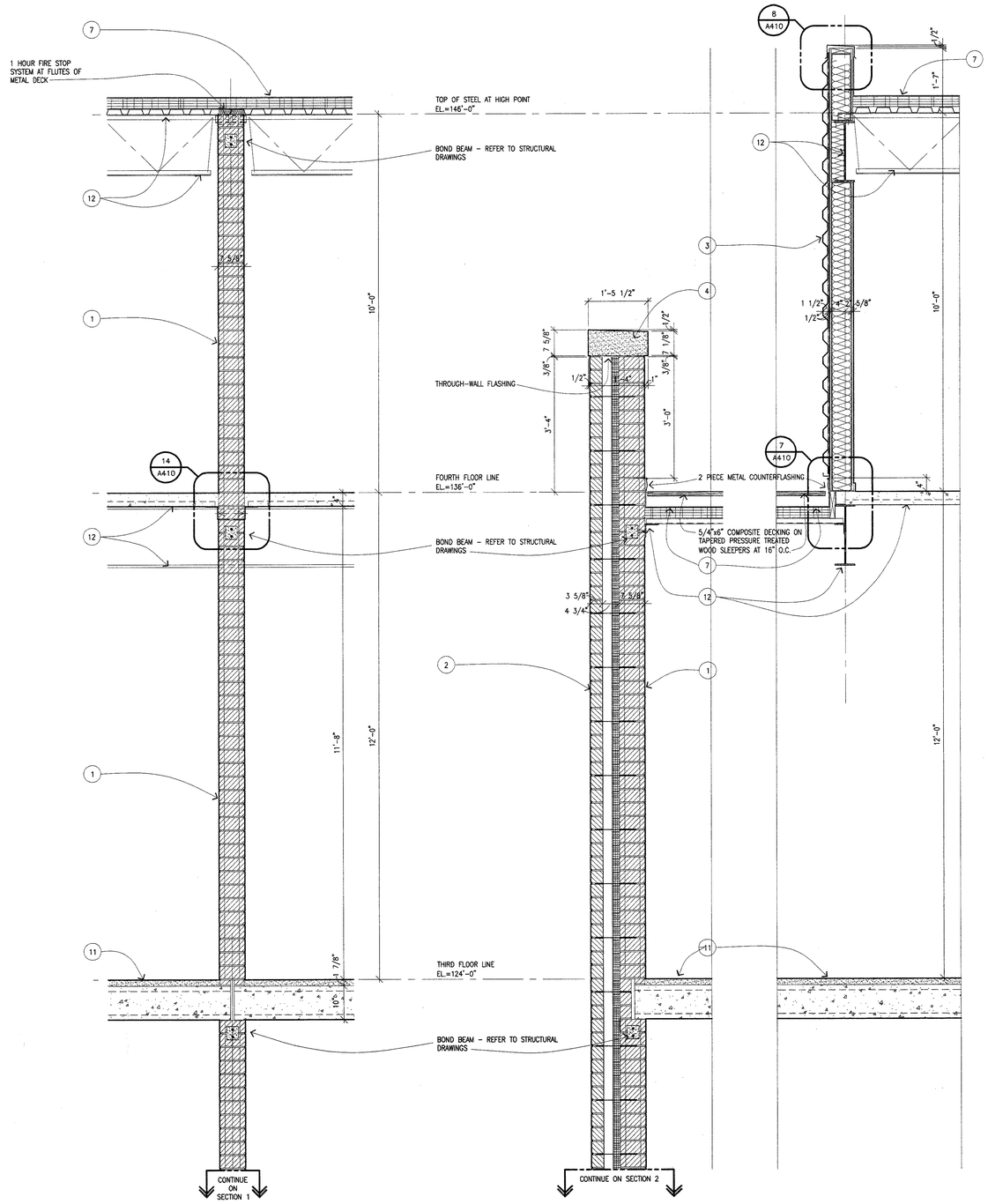

3 A203 WALL SECTION 3/4"=1'-0"

204, 214, 215, 216, 217, 219

4 A302 WALL SECTION 3/4"=1'-0"

NEUMANN SMITH & ASSOCIATES

Architecture
Planning
Interior Design

400 Galleria Officentre
Suite 555
Southfield, Michigan 48034

248-352-8310
FAX 248-352-1821
NS@neumannsmith.com

Metro Lofts
Royal Oak, Michigan

KEYNOTES

1 UTILITY BRICK THROUGH-WALL UNIT WITH GALVANIZED HORIZONTAL WALL REINFORCING AT 16" O.C. VERTICAL – REFER TO STRUCTURAL DRAWINGS FOR VERTICAL REINFORCING AND GROUTING OF CORES.

2 UTILITY BRICK VENEER WITH ADJUSTABLE GALVANIZED BRICK TIES + AIR SPACE + 2" RIGID INSULATION.

3 PREFINISHED METAL SIDING ON METAL SUBGIRT SYSTEM OVER AIR INFILTRATION BARRIER OVER 1/2" EXTERIOR GYPSUM SHEATHING + 6" COLD FORMED METAL FRAMING AT 16" O.C. + 6" BLANKET INSULATION + VAPOR RETARDER + 5/8" GYPSUM BOARD INTERIOR FINISH.

4 CAST STONE

5 CLEAR INSULATING VISION GLASS IN WINDOW WALL SYSTEM NO. 1.

6 CLEAR ANODIZED ALUMINUM SLIDING GLASS DOOR UNIT WITH FIXED TRANSOM WITH CLEAR INSULATING VISION GLASS.

7 SINGLE PLY EPDM MEMBRANE ROOFING FULLY ADHERED OVER TWO LAYERS (MIN.) OF POLYISOCYANURATE INSULATION MECHANICALLY FASTENED TO ROOF DECK.

8 SEALANT + BACKER ROD.

9 2" X 24" PERIMETER INSULATION

10 1/2" PREMOLDED JOINT FILLER + SEALANT

11 PRECAST CONCRETE PLANK WITH CONCRETE TOPPING

12 REFER TO STRUCTURAL DRAWINGS FOR DETAILS AND NOTES RELATING TO STEEL COLUMNS, BEAMS, JOISTS, BENT PLATES, ANGLES, OTHER STEEL SHAPES, CONCRETE ON METAL DECK FLOOR SYSTEMS AND ROOF DECK.

13 CONCRETE FOOTING/GRADE BEAM – REFER TO STRUCTURAL DRAWINGS FOR NOTES AND DETAILS.

14 CONCRETE FLOOR SLAB OVER VAPOR RETARDER ON COMPACTED GRANULAR FILL – REFER TO STRUCTURAL DRAWINGS FOR THICKNESS, REINFORCING AND RELATED NOTES AND DETAILS.

15 5/8" GYPSUM BOARD + VAPOR RETARDER ON 2" 3" FURRING SYSTEM WITH 2" RIGID INSULATION.

Revisions

MAY 28, 2004 – ISSUED FOR BIDS
MAY 13, 2004 – ISSUED FOR MASONRY PRICING

Date
4-5-2004
Drawn
PTM
Checked
MGD
Approved
PTM
Bidpak Number

☐ Preliminary
■ Construction
☐ Record

Do not scale
Use figured dimensions only
Copyright © 2003

Job Number
23091
Title
Wall Sections

Scale: 3/4" = 1'-0"
Sheet
A402

F:\2003\23091 - Metro Lofts\SD-Construction Documents\23091A402.dwg, 5/28/2004 4:08:22 PM, pat, Xerox 5100p-scanner.pc3, 1:1, Neumann/Smith & Assoc.

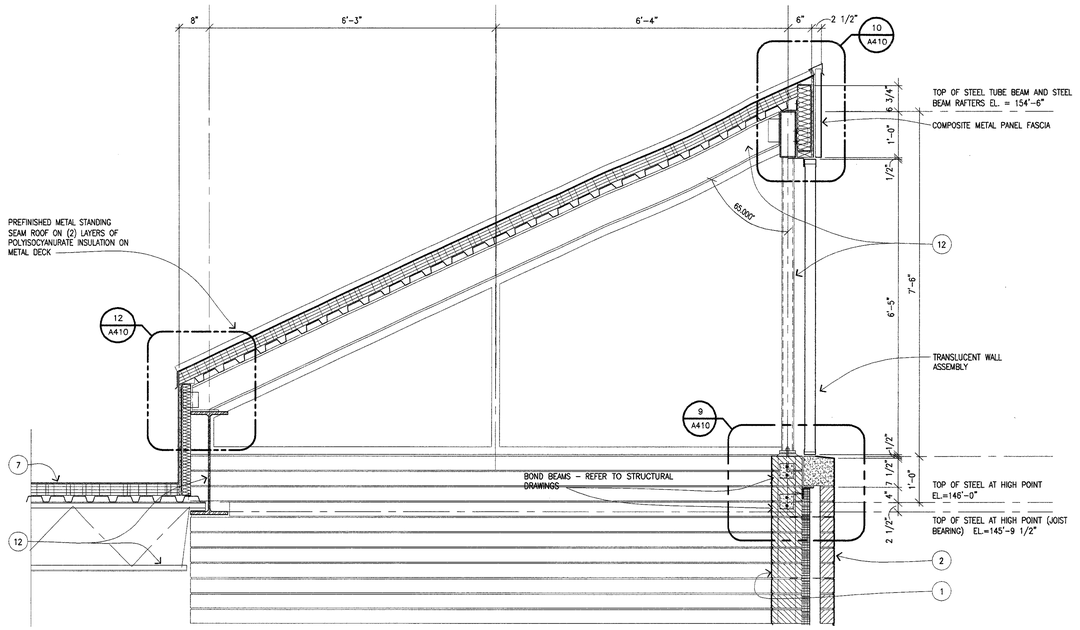

5 / A301 WALL SECTION 3/4"=1'-0"

A302
A303
A311

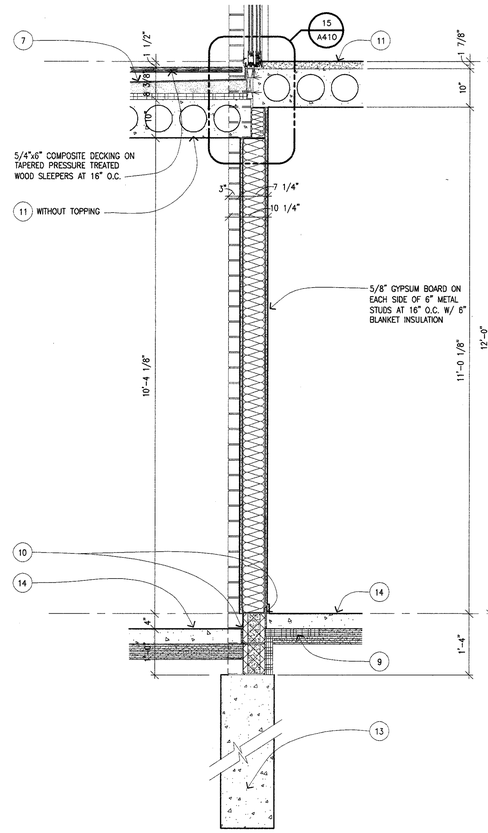

6 / A301 WALL SECTION 3/4"=1'-0"

310

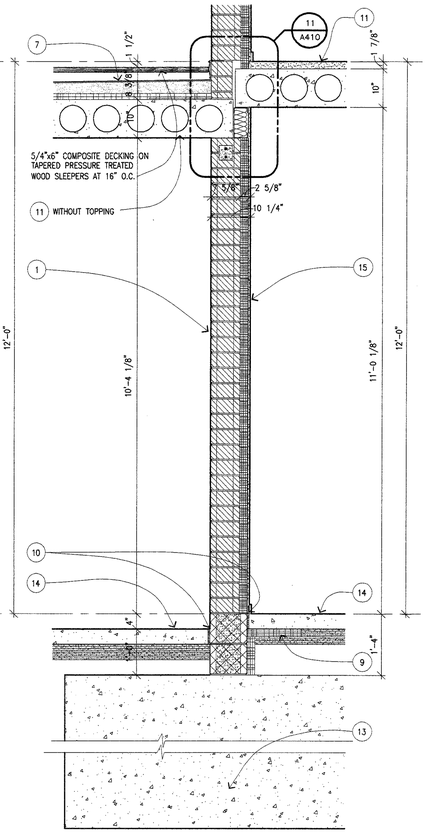

7 / A301 WALL SECTION 3/4"=1'-0"

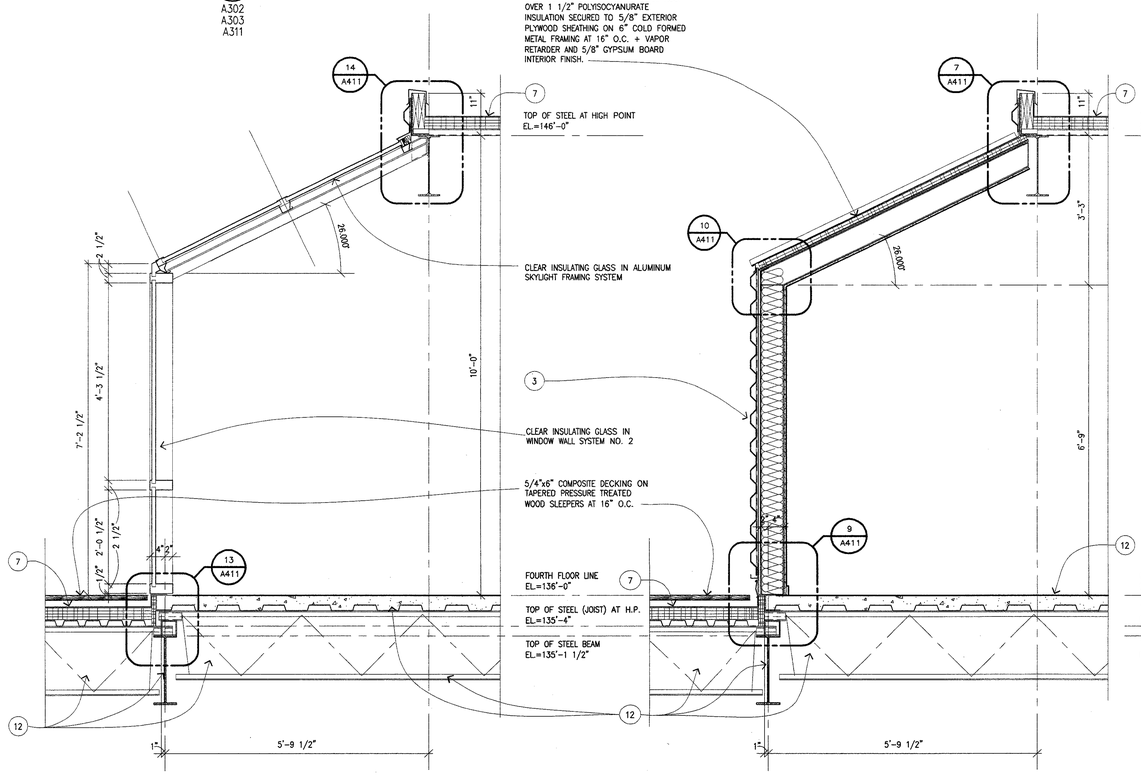

1 / A102 WALL SECTION 3/4"=1'-0"

301

2 / A301 WALL SECTION 3/4"=1'-0"

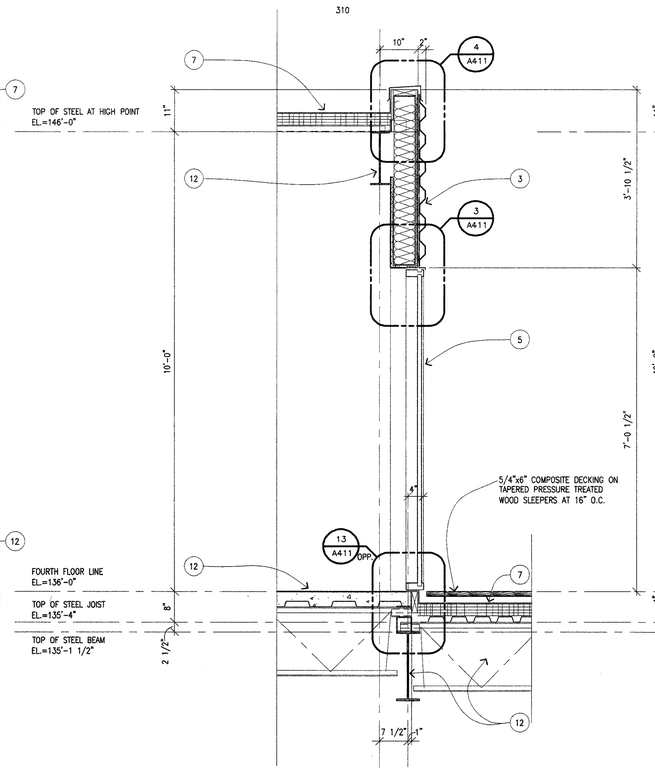

3 / A301 WALL SECTION 3/4"=1'-0"

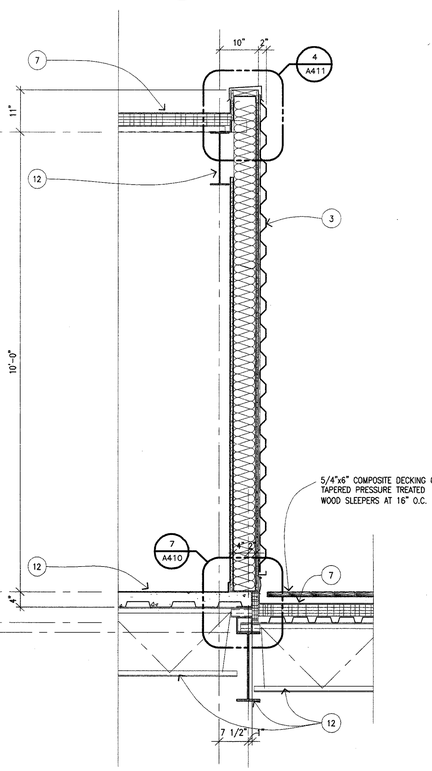

4 / A301 WALL SECTION 3/4"=1'-0"

NEUMANN SMITH & ASSOCIATES

Architecture
Planning
Interior Design

400 Galleria Officentre
Suite 555
Southfield, Michigan 48034

248-352-8310
FAX 248-352-1821
NS@neumannsmith.com

Metro Lofts

Royal Oak, Michigan

KEYNOTES

1 UTILITY BRICK THROUGH-WALL UNIT WITH GALVANIZED HORIZONTAL WALL REINFORCING AT 16" O.C. VERTICAL + REFER TO STRUCTURAL DRAWINGS FOR VERTICAL REINFORCING AND GROUTING OF CORES.

2 UTILITY BRICK VENEER WITH ADJUSTABLE GALVANIZED BRICK TIES + AIR SPACE + 2" RIGID INSULATION.

3 PREFINISHED METAL SIDING ON METAL SUBGIRT SYSTEM OVER AIR INFILTRATION BARRIER OVER 1/2" EXTERIOR GYPSUM SHEATHING + 6" COLD FORMED METAL FRAMING AT 16" O.C. + 6" BLANKET INSULATION + VAPOR RETARDER + 5/8" GYPSUM BOARD INTERIOR FINISH.

4 CAST STONE

5 CLEAR INSULATING VISION GLASS IN WINDOW WALL SYSTEM NO. 1.

6 CLEAR ANODIZED ALUMINUM SLIDING GLASS DOOR UNIT WITH FIXED TRANSOM WITH CLEAR INSULATING VISION GLASS.

7 SINGLE PLY EPDM MEMBRANE ROOFING FULLY ADHERED OVER TWO LAYERS (MIN.) OF POLYISOCYANURATE INSULATION MECHANICALLY FASTENED TO ROOF DECK.

8 SEALANT + BACKER ROD.

9 2" X 24" PERIMETER INSULATION

10 1/2" PREMOLDED JOINT FILLER + SEALANT

11 PRECAST CONCRETE PLANK WITH CONCRETE TOPPING

12 REFER TO STRUCTURAL DRAWINGS FOR DETAILS AND NOTES RELATING TO STEEL COLUMNS, BEAMS, JOISTS, BENT PLATES, ANGLES, OTHER STEEL SHAPES, CONCRETE ON METAL DECK FLOOR SYSTEMS AND ROOF DECK.

13 CONCRETE FOOTING/GRADE BEAM - REFER TO STRUCTURAL DRAWINGS FOR NOTES AND DETAILS.

14 CONCRETE FLOOR SLAB OVER VAPOR RETARDER ON COMPACTED GRANULAR FILL - REFER TO STRUCTURAL DRAWINGS FOR THICKNESS, REINFORCING AND RELATED NOTES AND DETAILS.

15 5/8" GYPSUM BOARD + VAPOR RETARDER ON 2" 'Z' FURRING SYSTEM WITH 2" RIGID INSULATION.

Revisions

STATE OF MICHIGAN — LAWRENCE P. SMITH — ARCHITECT — REGISTERED ARCHITECT

MAY 28, 2004 - ISSUED FOR BIDS
MAY 13, 2004 - ISSUED FOR MASONRY PRICING

Date
4-19-2004
Drawn
PTM
Checked
MGD
Approved
PTM
Bidpak Number

☐ Preliminary
■ Construction
☐ Record

Do not scale
Use figured dimensions only
Copyright © 2003

Job Number
23091
Title
Wall Sections

Scale: 3/4" = 1'-0"

Sheet
A403

F:\2003\23091 - Metro Lofts\3D-Construction Documents\23091A403.dwg, 5/28/2004 4:06:53 PM, pat, Xerox 5100dp scanner.pc3, 1:1, Neumann/Smith & Assoc.

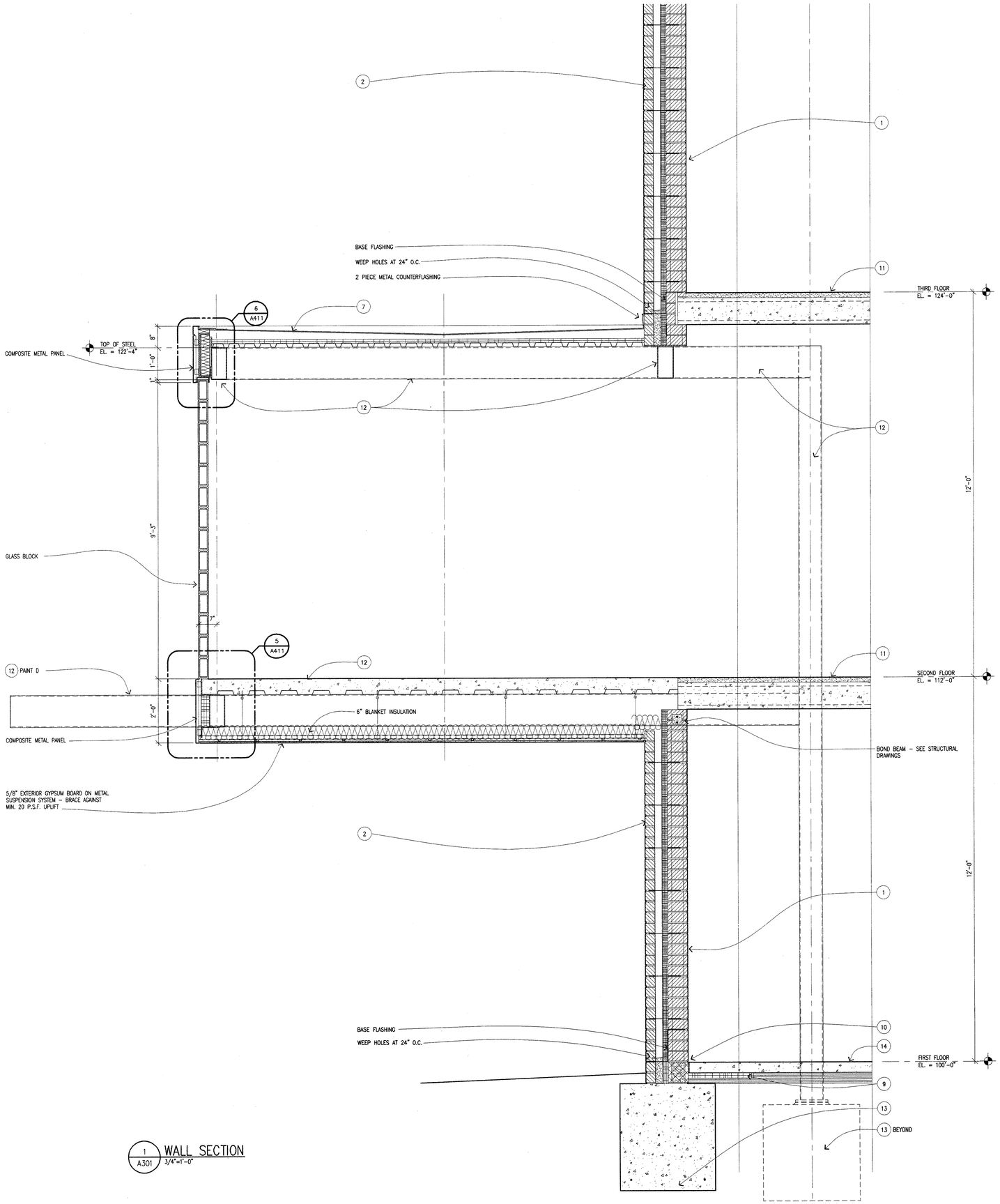

1 A301 WALL SECTION 3/4"=1'-0"

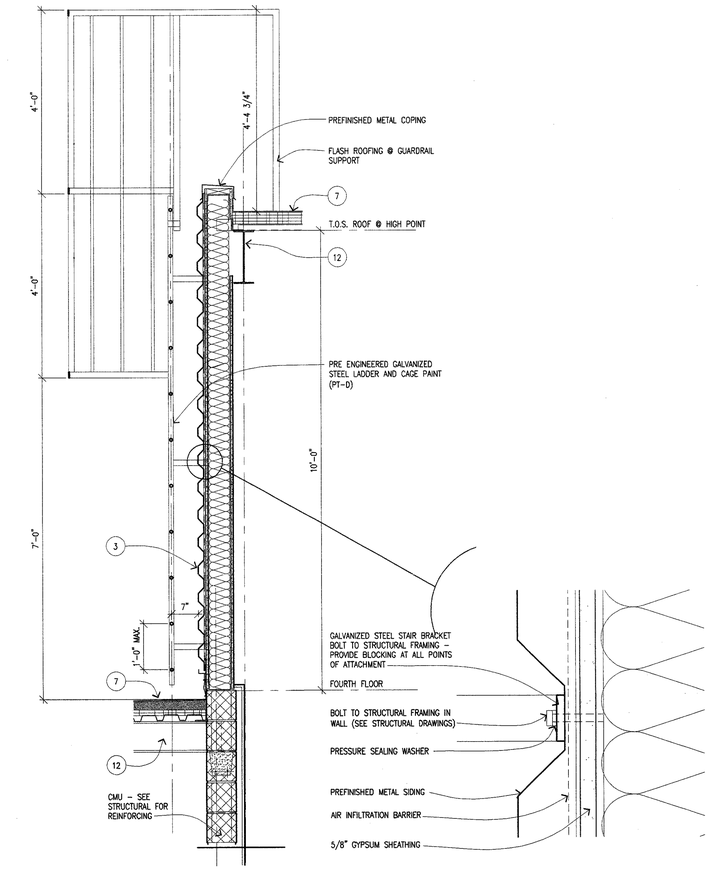

2 A301 WALL SECTION 3/4"=1'-0"

3 A404 DETAIL FULL SIZE

KEYNOTES

1. UTILITY BRICK THROUGH-WALL UNIT WITH GALVANIZED HORIZONTAL WALL REINFORCING AT 16" O.C. VERTICAL - REFER TO STRUCTURAL DRAWINGS FOR VERTICAL REINFORCING AND GROUTING OF CORES.
2. UTILITY BRICK VENEER WITH ADJUSTABLE GALVANIZED BRICK TIES + AIR SPACE + 2" RIGID INSULATION.
3. PREFINISHED METAL SIDING ON METAL SUBGRIT SYSTEM OVER AIR INFILTRATION BARRIER OVER 1/2" EXTERIOR GYPSUM SHEATHING + 6" COLD FORMED METAL FRAMING AT 16" O.C. + 5" BLANKET INSULATION + VAPOR RETARDER + 5/8" GYPSUM BOARD INTERIOR FINISH.
4. CAST STONE
5. CLEAR INSULATING VISION GLASS IN WINDOW WALL SYSTEM NO. 1.
6. CLEAR ANODIZED ALUMINUM SLIDING GLASS DOOR UNIT WITH FIXED TRANSOM WITH CLEAR INSULATING VISION GLASS.
7. SINGLE PLY EPDM MEMBRANE ROOFING FULLY ADHERED OVER TWO LAYERS (MIN.) OF POLYISOCYANURATE INSULATION MECHANICALLY FASTENED TO ROOF DECK.
8. SEALANT + BACKER ROD.
9. 2" X 24" PERIMETER INSULATION
10. 1/2" PREMOLDED JOINT FILLER + SEALANT
11. PRECAST CONCRETE PLANK WITH CONCRETE TOPPING
12. REFER TO STRUCTURAL DRAWINGS FOR DETAILS AND NOTES RELATING TO STEEL COLUMNS, BEAMS, JOISTS, BENT PLATES, ANGLES, OTHER STEEL SHAPES, CONCRETE ON METAL DECK FLOOR SYSTEMS AND ROOF DECK.
13. CONCRETE FOOTING/GRADE BEAM - REFER TO STRUCTURAL DRAWINGS FOR NOTES AND DETAILS.
14. CONCRETE FLOOR SLAB OVER VAPOR RETARDER ON COMPACTED GRANULAR FILL - REFER TO STRUCTURAL DRAWINGS FOR THICKNESS, REINFORCING AND RELATED NOTES AND DETAILS.
15. 5/8" GYPSUM BOARD + VAPOR RETARDER ON 2" 2" FURRING SYSTEM WITH 2" RIGID INSULATION.

NEUMANN SMITH & ASSOCIATES

Architecture
Planning
Interior Design

400 Galleria Officentre
Suite 555
Southfield, Michigan 48034

248-352-8310
FAX 248-352-1821
NS@neumannsmith.com

Metro Lofts
Royal Oak, Michigan

Revisions

MAY 28, 2004 - ISSUED FOR BIDS
MAY 13, 2004 - ISSUED FOR MASONRY PRICING

Date
4-26-2004
Drawn
PTM
Checked
MGD
Approved
PTM
Bidpak Number

☐ Preliminary
■ Construction
☐ Record

Do not scale
Use figured dimensions only
Copyright © 2003

Job Number
23091
Title
Wall Sections

Scale: 3/4" = 1'-0"
Sheet
A404

F:\2003\23091 - Metro Lofts\3Dc Construction Documents\23091A404.dwg, 5/28/2004 4:06:33 PM, pat, Xerox 5104p-scanner.pc3, 1:1, Neumann/Smith & Assoc.

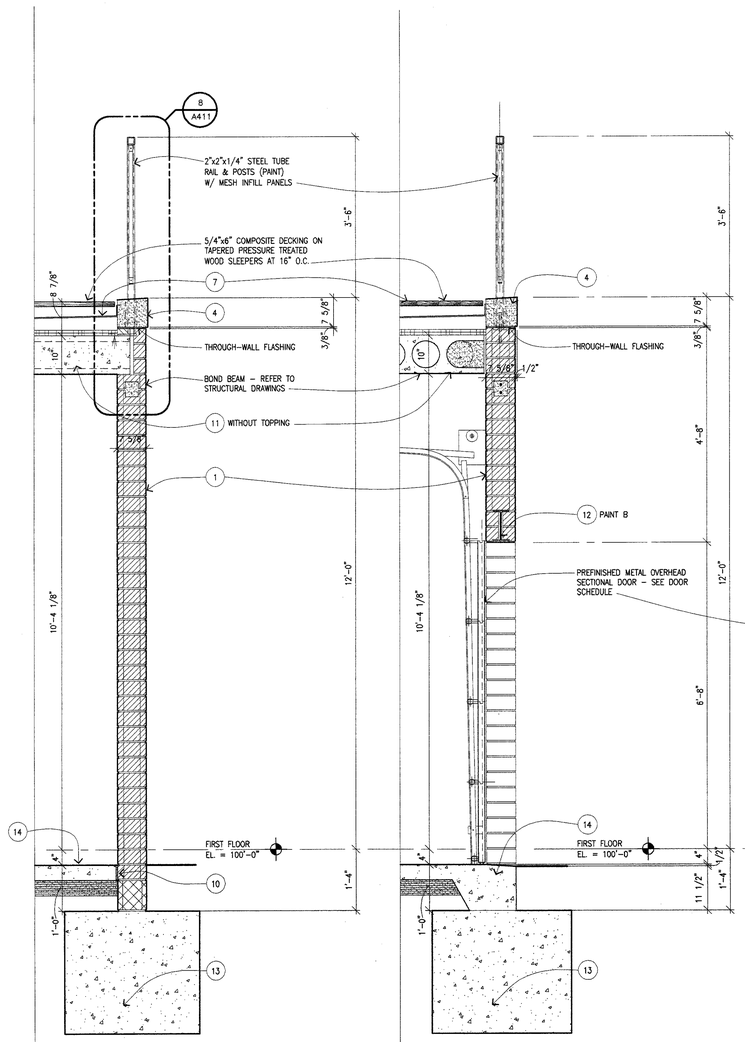

1 A302 WALL SECTION 3/4"=1'-0"

2 A301 WALL SECTION 3/4"=1'-0"

310

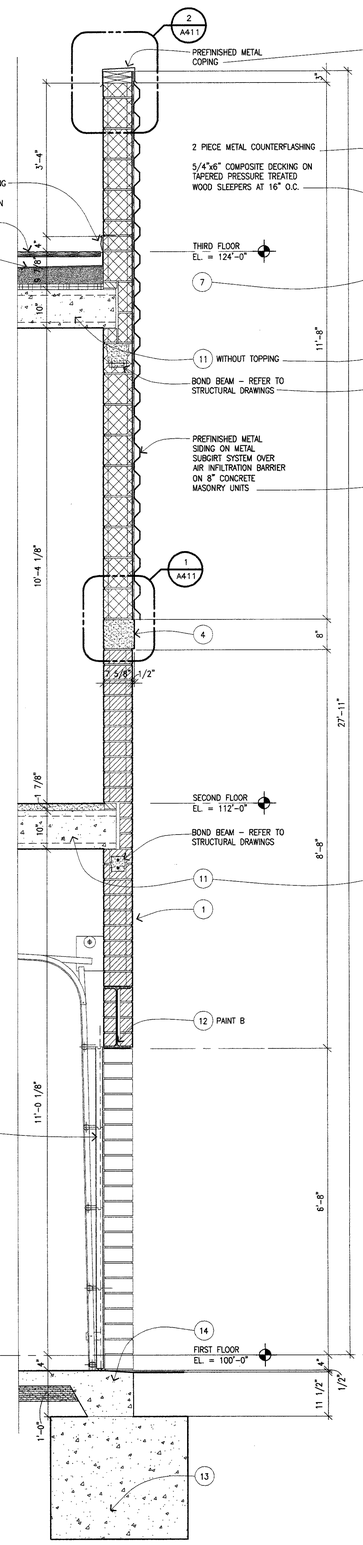

3 A301 WALL SECTION 3/4"=1'-0"

302, 303, 311

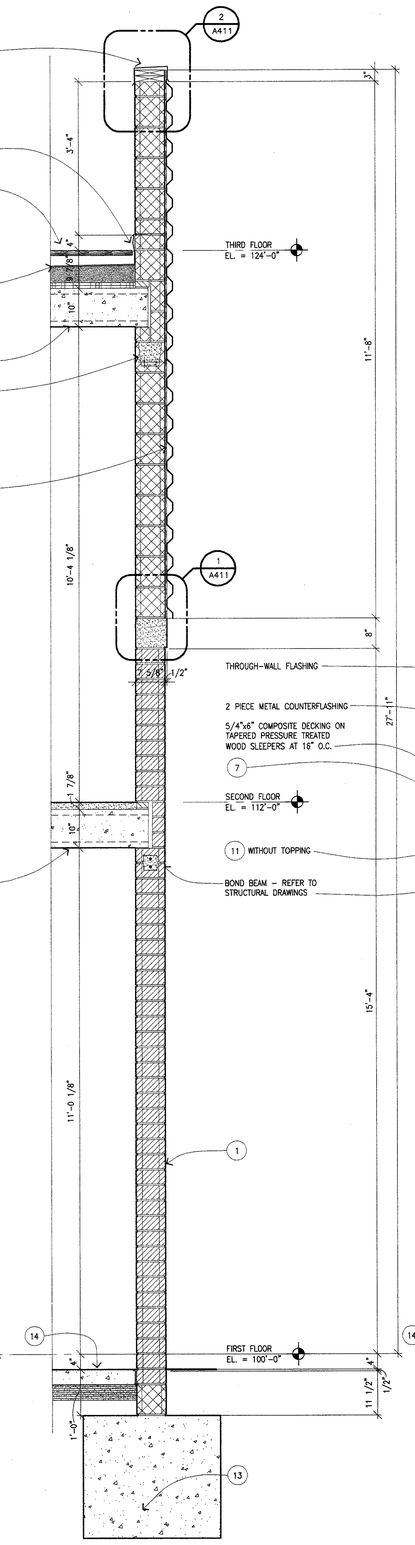

4 A301 WALL SECTION 3/4"=1'-0"

302, 303

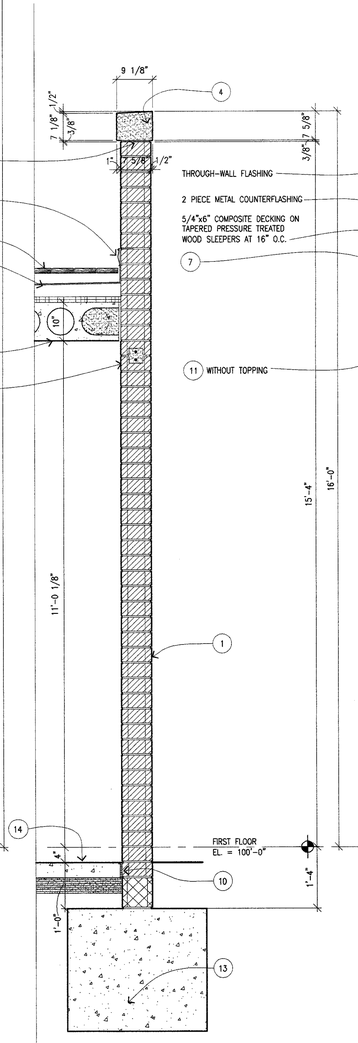

5 A301 WALL SECTION 3/4"=1'-0"

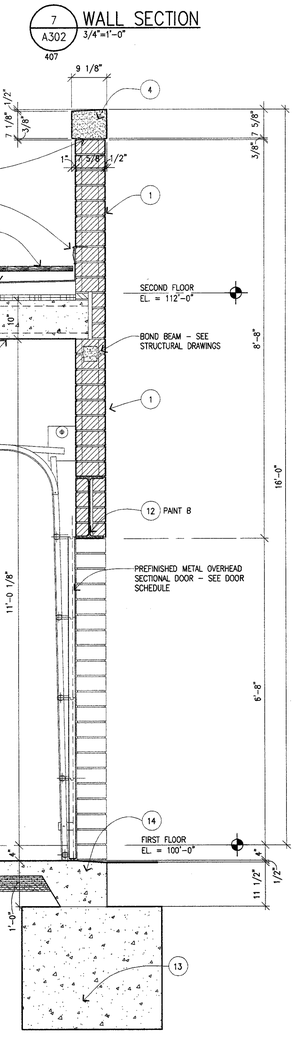

6 A301 WALL SECTION 3/4"=1'-0"

302, 303

NEUMANN SMITH & ASSOCIATES

Architecture
Planning
Interior Design

400 Galleria Officentre
Suite 555
Southfield, Michigan 48034

248-352-8310
FAX 248-352-1821
NS@neumannsmith.com

Metro Lofts

Royal Oak, Michigan

Revisions

STATE OF MICHIGAN LICENSED ARCHITECT LAWRENCE G. SMITH

MAY 28, 2004 - ISSUED FOR BIDS
MAY 13, 2004 - ISSUED FOR MASONRY PRICING

Date
4-5-2004
Drawn
PTM
Checked
MGD
Approved
PTM
Bidpak Number

☐ Preliminary
■ Construction
☐ Record

Do not scale
Use figured dimensions only
Copyright © 2003

Job Number
23091

Title
Wall Sections

Scale: 3/4" = 1'-0"

Sheet
A405

F:\2003\23091 - Metro Lofts\30-Construction Documents\23091A405.dwg, 5/28/2004 4:06:13 PM, pat, Xerox 5104dp-scanner.pc3, 1:1, NeumannSmith & Assoc.

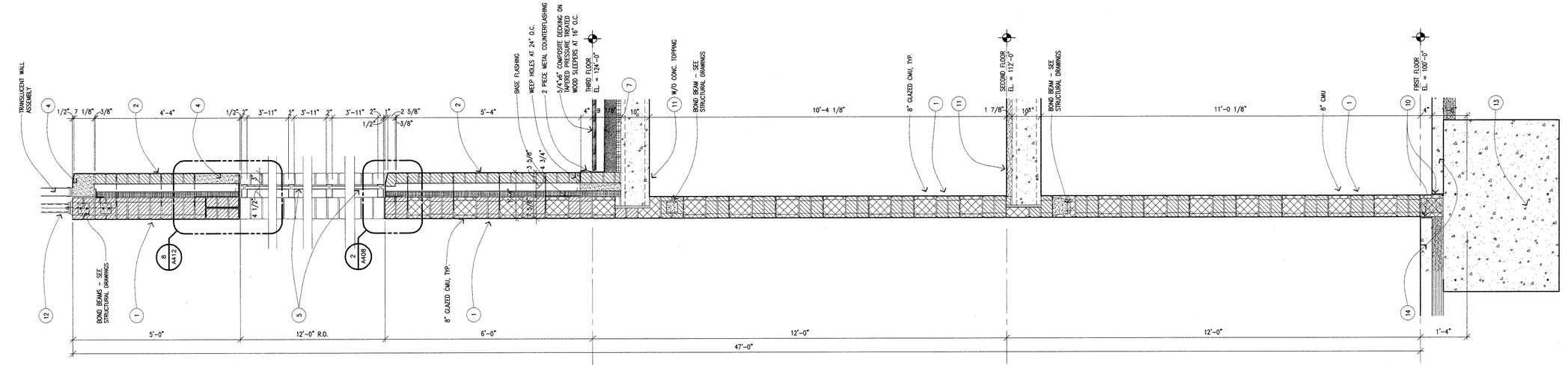

4 WALL SECTION 3/4"=1'-0" — 4/A302 — A303

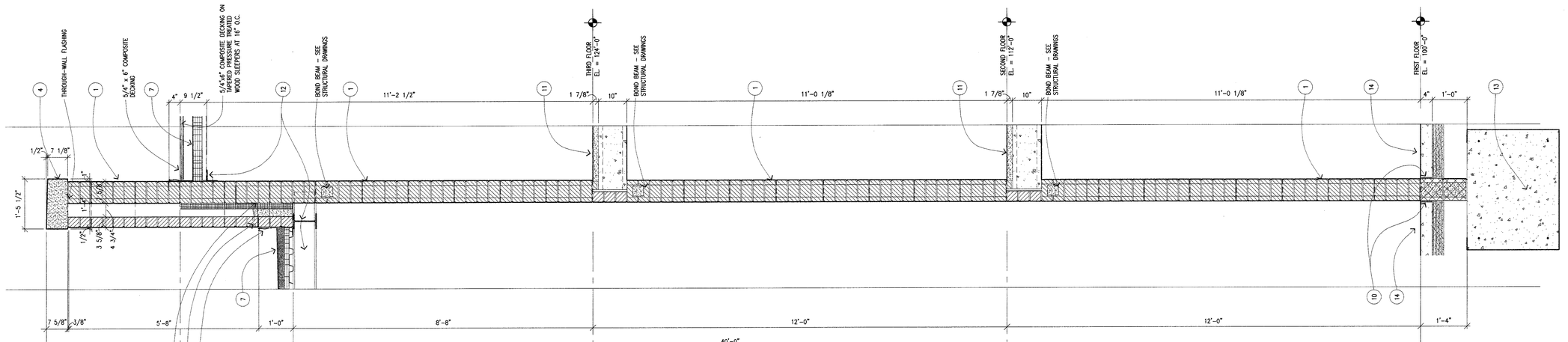

3 WALL SECTION 3/4"=1'-0" — 3/A302

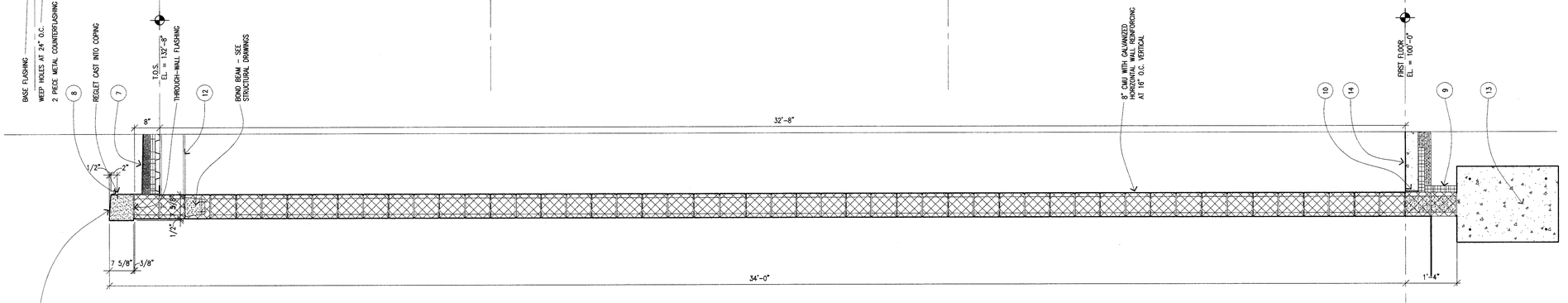

2 WALL SECTION 3/4"=1'-0" — 2/A301 — A302

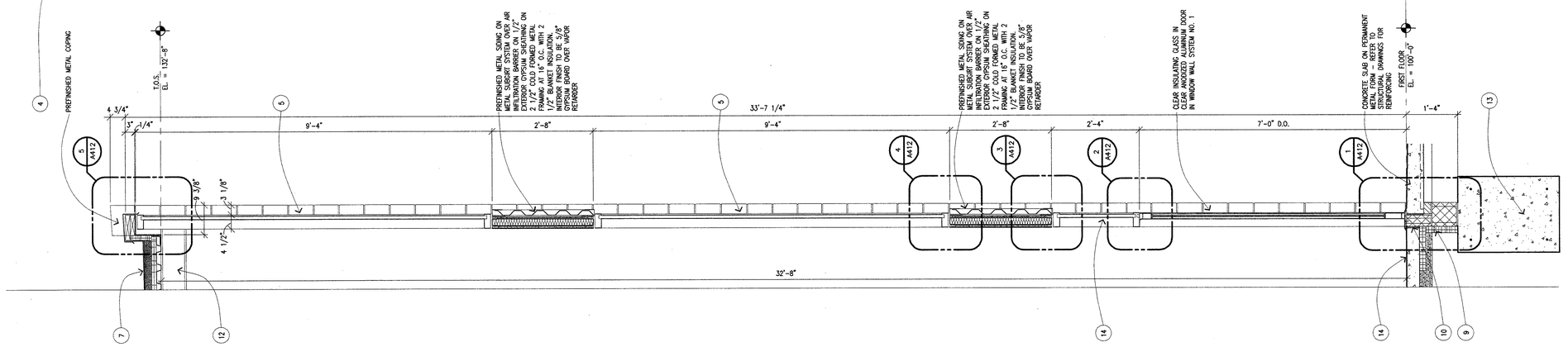

1 WALL SECTION 3/4"=1'-0" — 1/A302

NEUMANN SMITH & ASSOCIATES

Architecture
Planning
Interior Design

400 Galleria Officentre
Suite 555
Southfield, Michigan 48034

248-352-8310
FAX 248-352-1821
NS@neumannsmith.com

Metro Lofts
Royal Oak, Michigan

Revisions

MAY 28, 2004 - ISSUED FOR BIDS
MAY 13, 2004 - ISSUED FOR MASONRY PRICING

Date
4-5-2004
Drawn
PTM
Checked
MGD
Approved
PTM
Bidpak Number

☐ Preliminary
■ Construction
☐ Record

Do not scale
Use figured dimensions only
Copyright © 2003

Job Number
23091
Title
Wall Sections

Scale: 3/4" = 1'-0"

Sheet
A406

F:\2003\23091 - Metro Lofts\03-Construction Documents\23091A406.dwg, 5/28/2004 4:05:52 PM, pat, Xerox 5100dp scanner.pc3, 1:1, Neumann/Smith & Assoc.

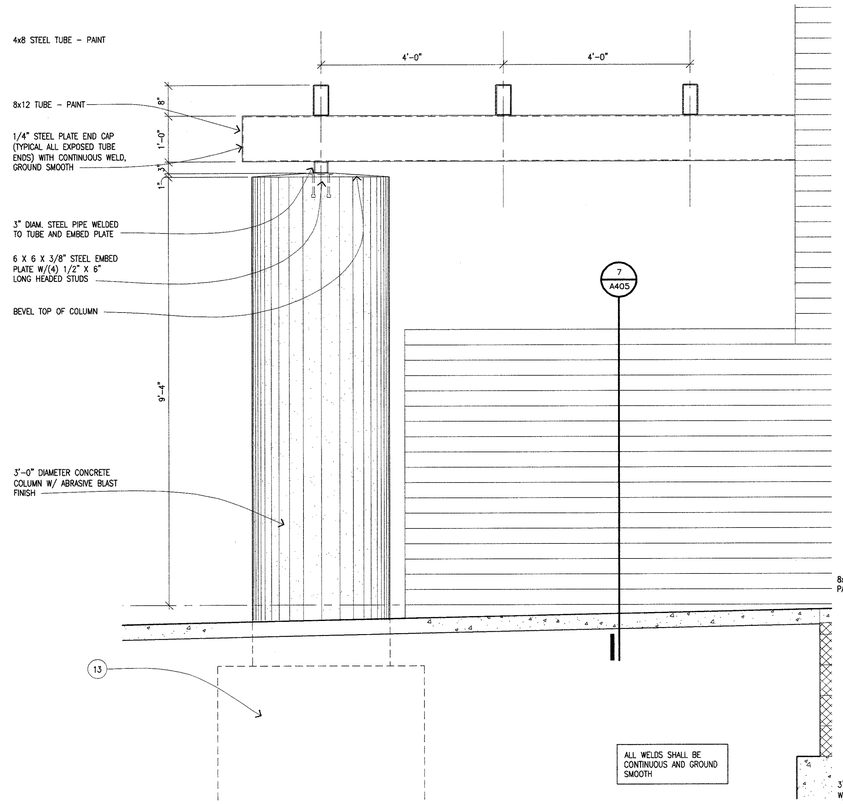

4 / A407 SECTION
1/4"=1'-0"

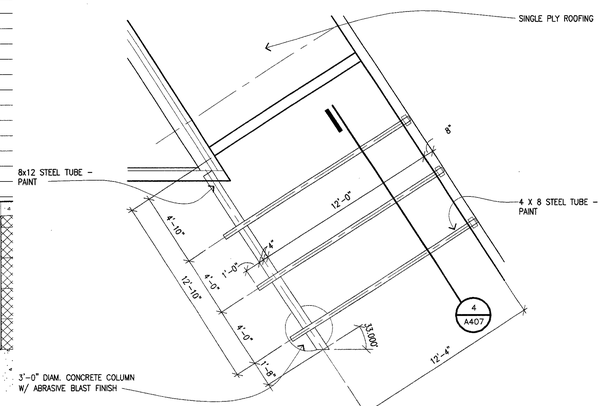

3 / A201 ENLARGED CANOPY PLAN
1/4"=1'-0"

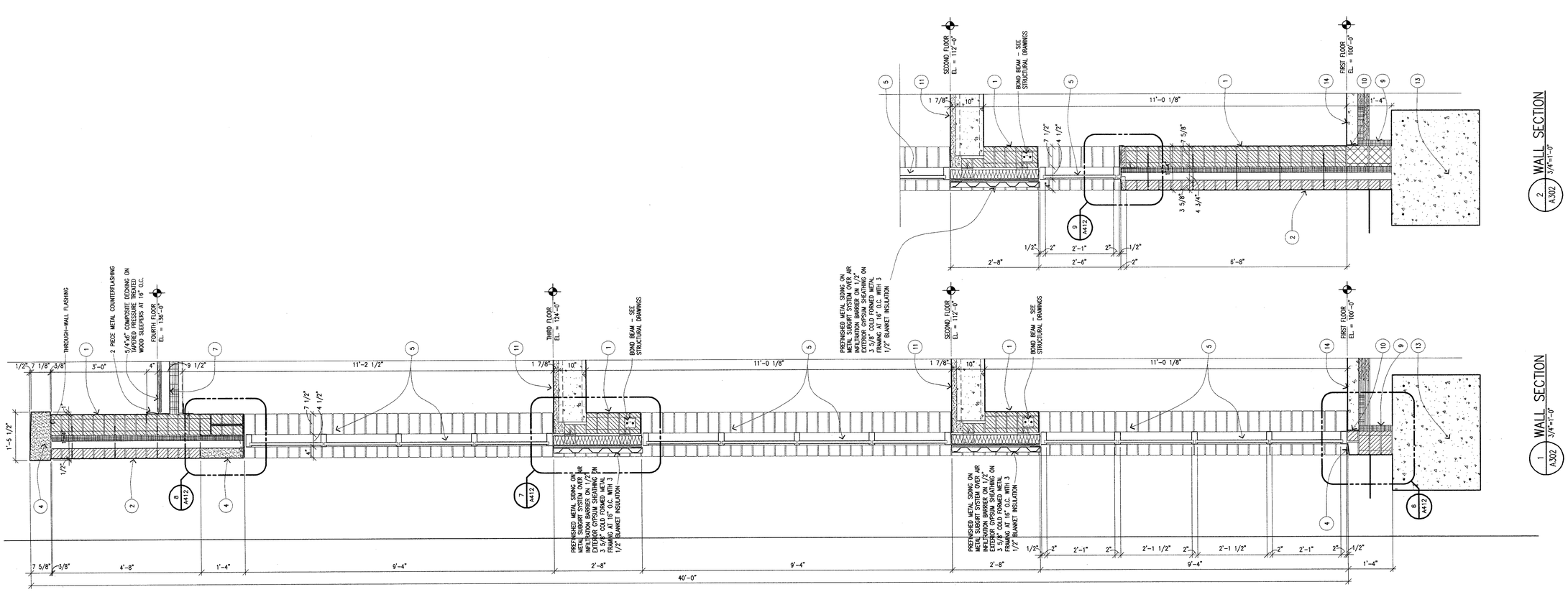

1 / A302 WALL SECTION
3/4"=1'-0"

2 / A302 WALL SECTION
3/4"=1'-0"

NEUMANN SMITH & ASSOCIATES

Architecture
Planning
Interior Design

400 Galleria Officentre
Suite 555
Southfield, Michigan 48034

248-352-8310
FAX 248-352-1821
NS@neumannsmith.com

Metro Lofts

Royal Oak, Michigan

KEYNOTES

1. UTILITY BRICK THROUGH-WALL UNIT WITH GALVANIZED HORIZONTAL WALL REINFORCING AT 16" O.C. VERTICAL – REFER TO STRUCTURAL DRAWINGS FOR VERTICAL REINFORCING AND GROUTING OF CORES.
2. UTILITY BRICK VENEER WITH ADJUSTABLE GALVANIZED BRICK TIES + AIR SPACE + 2" RIGID INSULATION.
3. PREFINISHED METAL SIDING ON METAL SUBGRT SYSTEM OVER AIR INFILTRATION BARRIER OVER 1/2" EXTERIOR GYPSUM SHEATHING + 6" COLD FORMED METAL FRAMING AT 16" O.C. + 6" BLANKET INSULATION + VAPOR RETARDER + 5/8" GYPSUM BOARD INTERIOR FINISH.
4. CAST STONE
5. CLEAR INSULATING VISION GLASS IN WINDOW WALL SYSTEM NO. 1.
6. CLEAR ANODIZED ALUMINUM SLIDING GLASS DOOR UNIT WITH FIXED TRANSOM WITH CLEAR INSULATING VISION GLASS.
7. SINGLE PLY EPDM MEMBRANE ROOFING FULLY ADHERED OVER TWO LAYERS (MIN.) OF POLYISOCYANURATE INSULATION MECHANICALLY FASTENED TO ROOF DECK.
8. SEALANT + BACKER ROD.
9. 2" X 24" PERIMETER INSULATION
10. 1/2" PREMOLDED JOINT FILLER + SEALANT
11. PRECAST CONCRETE PLANK WITH CONCRETE TOPPING
12. REFER TO STRUCTURAL DRAWINGS FOR DETAILS AND NOTES RELATING TO STEEL COLUMNS, BEAMS, JOISTS, BONT PLATES, ANGLES, OTHER STEEL SHAPES, CONCRETE ON METAL DECK FLOOR SYSTEMS AND ROOF DECK.
13. CONCRETE FOOTING/GRADE BEAM – REFER TO STRUCTURAL DRAWINGS FOR NOTES AND DETAILS.
14. CONCRETE FLOOR SLAB OVER VAPOR RETARDER ON COMPACTED GRANULAR FILL – REFER TO STRUCTURAL DRAWINGS FOR THICKNESS, REINFORCING AND RELATED NOTES AND DETAILS.
15. 5/8" GYPSUM BOARD + VAPOR RETARDER ON 2" "Z" FURRING SYSTEM WITH 2" RIGID INSULATION.

Revisions

STATE OF MICHIGAN – JOSEPH LAWRENCE SMITH – ARCHITECT

MAY 28, 2004 – ISSUED FOR BIDS
MAY 13, 2004 – ISSUED FOR MASONRY PRICING

Date
4-5-2004
Drawn
PTM / MGD
Checked
MGD
Approved
PTM
Bidpak Number

☐ Preliminary
■ Construction
☐ Record

Do not scale
Use figured dimensions only
Copyright © 2003

Job Number
23091
Title
Wall Sections

Scale: 3/4" = 1'-0"
Sheet
A407

F:\2003\23091 - Metro Lofts\30-Construction Documents\23091A407.dwg, 5/28/2004 4:05:33 PM, pat, Xerox 510dp-scanner.pc3, 1:1, Neumann/Smith & Assoc.

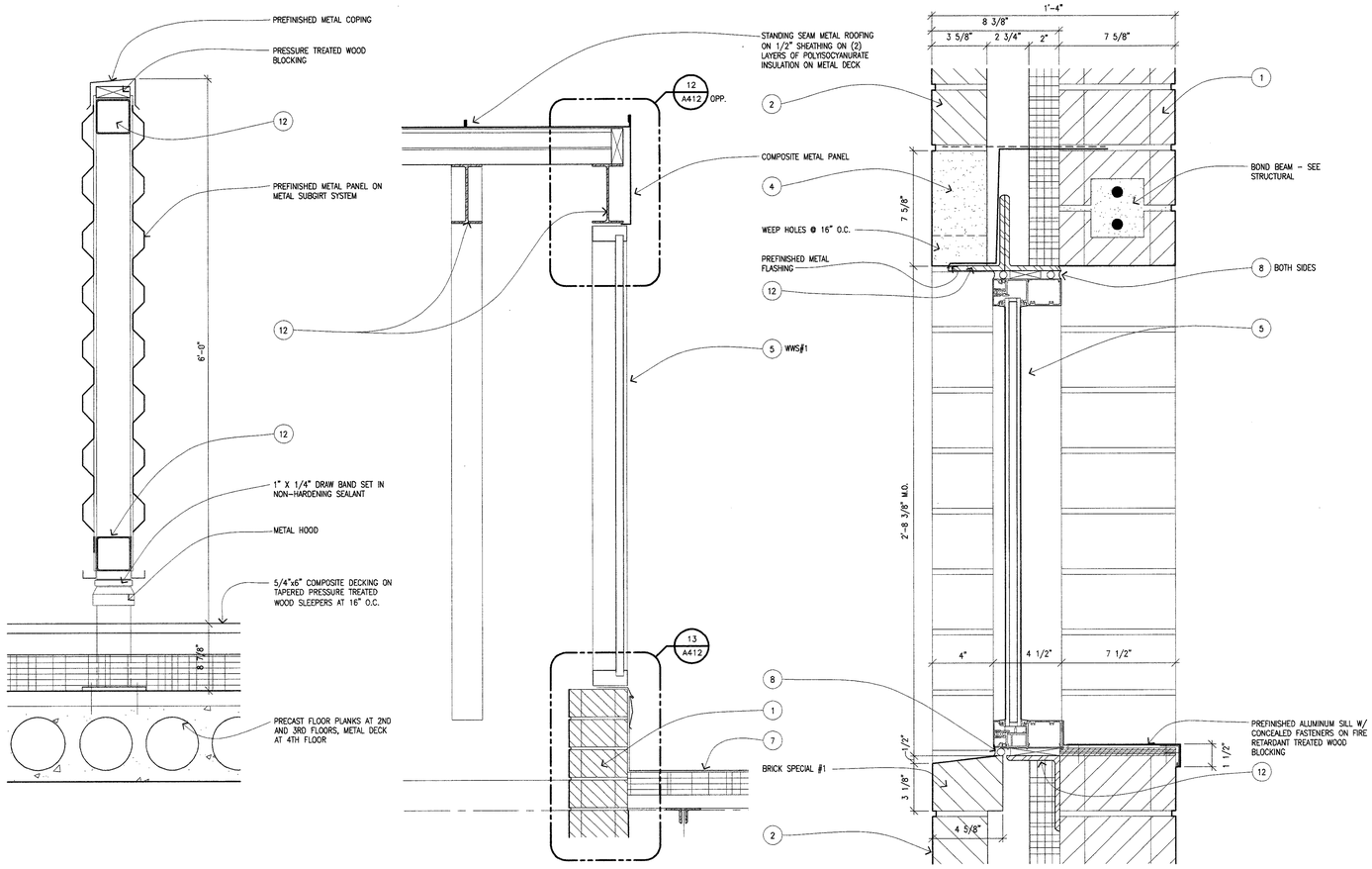

4 A310 SECTION AT TERRACE DIVIDING WALLS
1 1/2"=1'-0"

3 A313 SECTION
1 1/2"=1'-0"

2 A302 406, 408 TYPICAL PUNCHED WINDOW OPENING
3"=1'-0"

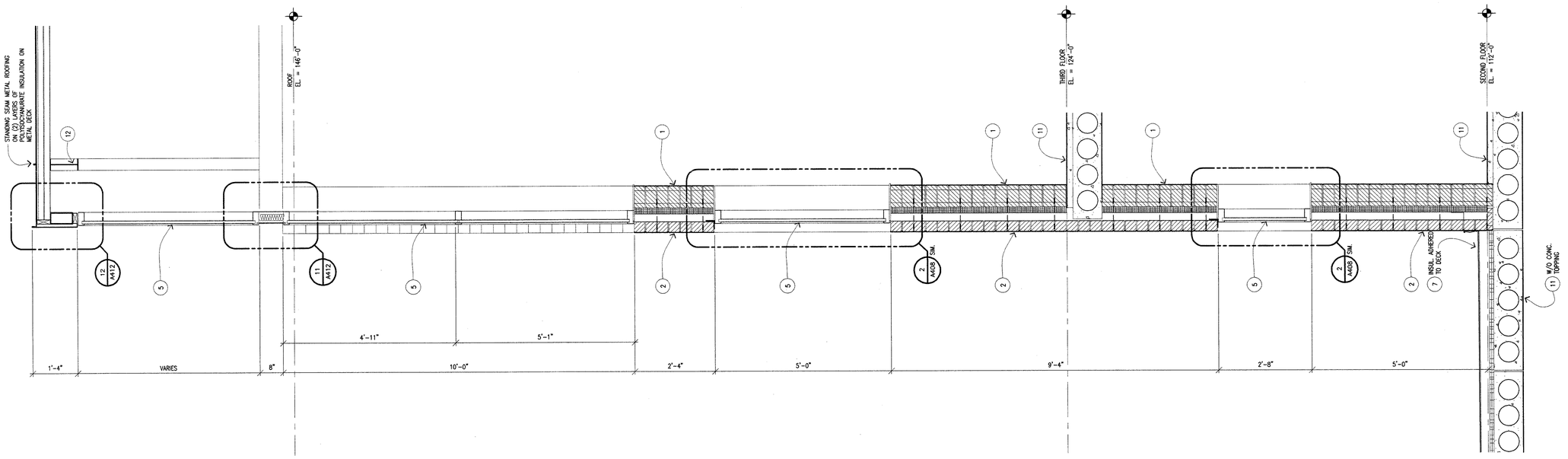

1 A303 A313 WALL SECTION
3/4"=1'-0"

F:\2000\23091 - Metro Lofts\3b-Construction Documents\23091A408.dwg, 5/28/2004 4:05:11 PM, pat, Xerox 5164p scanner.pc3, 1:1, Neumann/Smith & Assoc.

NEUMANN SMITH & ASSOCIATES

Architecture
Planning
Interior Design

400 Galleria Officentre
Suite 555
Southfield, Michigan 48034

248-352-8310
FAX 248-352-1821
NS@neumannsmith.com

Metro Lofts
Royal Oak, Michigan

KEYNOTES

1 UTILITY BRICK THROUGH-WALL UNIT WITH GALVANIZED HORIZONTAL WALL REINFORCING AT 16" O.C. VERTICAL - REFER TO STRUCTURAL DRAWINGS FOR VERTICAL REINFORCING AND GROUTING OF CORES.

2 UTILITY BRICK VENEER WITH ADJUSTABLE GALVANIZED BRICK TIES + AIR SPACE + 2" RIGID INSULATION.

3 PREFINISHED METAL SIDING ON METAL SUBGIRT SYSTEM OVER AIR INFILTRATION BARRIER OVER 1/2" EXTERIOR GYPSUM SHEATHING + 6" COLD FORMED METAL FRAMING AT 16" O.C. + 6" BLANKET INSULATION + VAPOR RETARDER + 5/8" GYPSUM BOARD INTERIOR FINISH.

4 CAST STONE

5 CLEAR INSULATING VISION GLASS IN WINDOW WALL SYSTEM NO. 1.

6 CLEAR ANODIZED ALUMINUM SLIDING GLASS DOOR UNIT WITH FIXED TRANSOM WITH CLEAR INSULATING VISION GLASS.

7 SINGLE PLY EPDM MEMBRANE ROOFING FULLY ADHERED OVER TWO LAYERS (MIN.) OF POLYISOCYANURATE INSULATION MECHANICALLY FASTENED TO ROOF DECK.

8 SEALANT + BACKER ROD.

9 2" X 24" PERIMETER INSULATION

10 1/2" PREMOLDED JOINT FILLER + SEALANT

11 PRECAST CONCRETE PLANK WITH CONCRETE TOPPING

12 REFER TO STRUCTURAL DRAWINGS FOR DETAILS AND NOTES RELATING TO STEEL COLUMNS, BEAMS, JOISTS, BENT PLATES, ANGLES, OTHER STEEL SHAPES, CONCRETE ON METAL DECK FLOOR SYSTEMS AND ROOF DECK.

13 CONCRETE FOOTING/GRADE BEAM - REFER TO STRUCTURAL DRAWINGS FOR NOTES AND DETAILS.

14 CONCRETE FLOOR SLAB OVER VAPOR RETARDER ON COMPACTED GRANULAR FILL - REFER TO STRUCTURAL DRAWINGS FOR THICKNESS, REINFORCING AND RELATED NOTES AND DETAILS.

15 5/8" GYPSUM BOARD + VAPOR RETARDER ON 2" "Z" FURRING SYSTEM WITH 2" RIGID INSULATION.

Revisions

STATE OF MICHIGAN
LAWRENCE D. SMITH
ARCHITECT
REGISTERED ARCHITECT

MAY 28, 2004 - ISSUED FOR BIDS

Date
4-5-2004
Drawn
MGD / MDS
Checked
MGD
Approved
PTM
Bidpak Number

☐ Preliminary
■ Construction
☐ Record

Do not scale
Use figured dimensions only
Copyright © 2003

Job Number
23091
Title
Wall Sections

Scale: 3/4" = 1'-0"
Sheet
A408

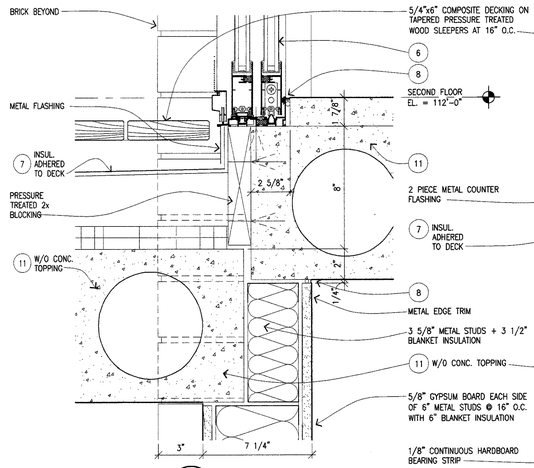

15 A403 DETAIL 3"=1'-0"

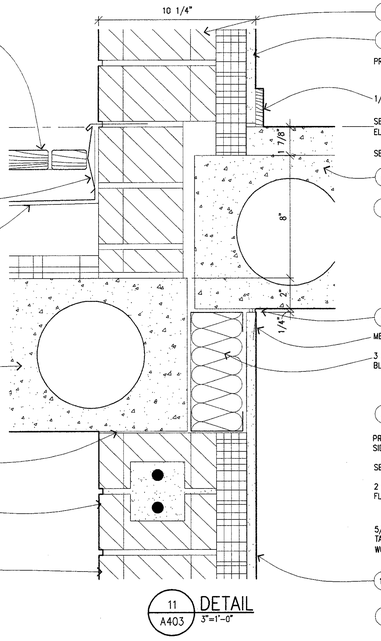

11 A403 DETAIL 3"=1'-0"

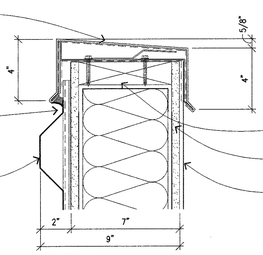

8 A402 DETAIL 3"=1'-0"

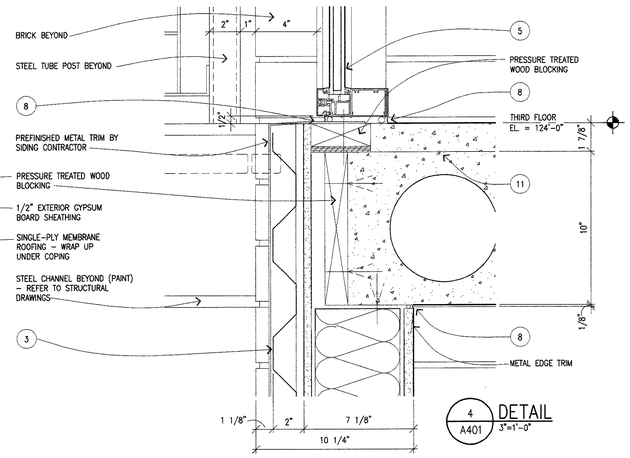

4 A401 DETAIL 3"=1'-0"

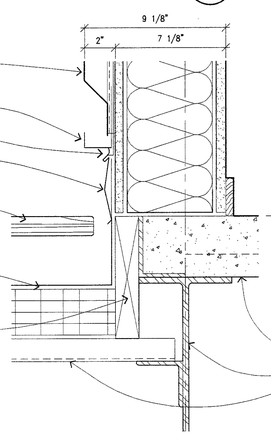

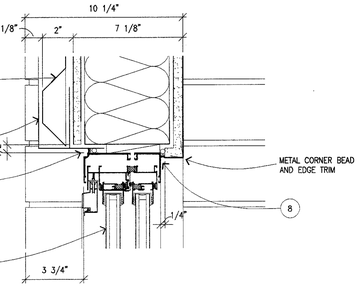

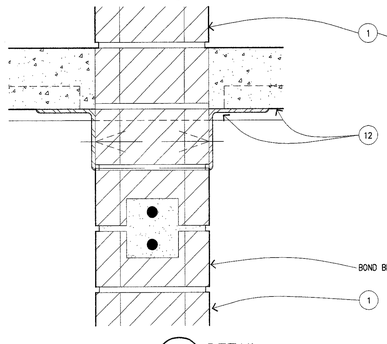

14 A402 DETAIL 3"=1'-0"

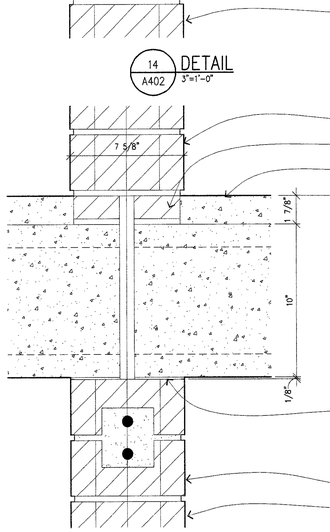

13 A402 DETAIL 3"=1'-0"

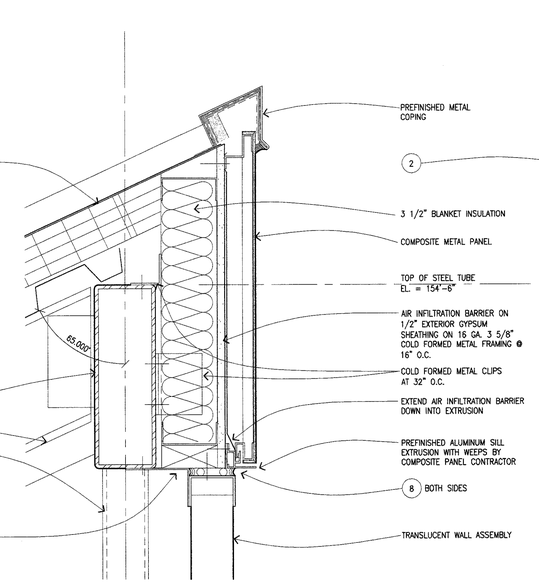

10 A403 DETAIL 3"=1'-0"

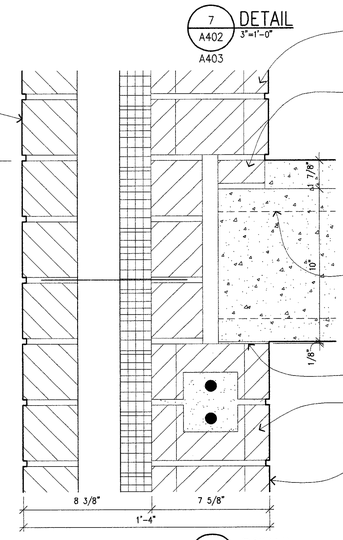

6 A402 DETAIL 3"=1'-0"

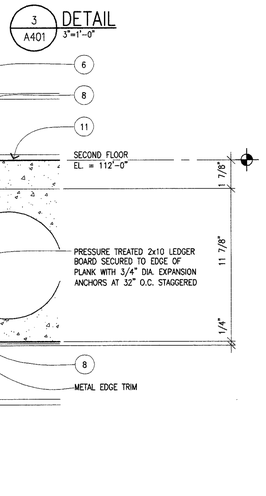

2 A401 DETAIL 3"=1'-0"

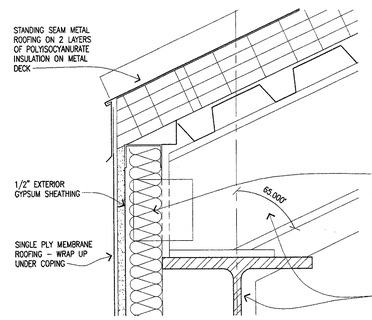

12 A403 DETAIL 3"=1'-0"

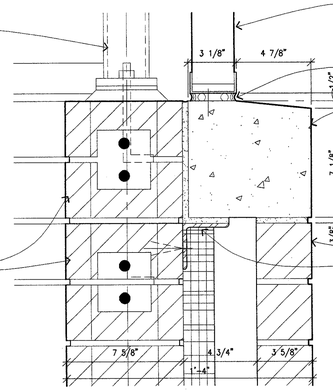

9 A403 DETAIL 3"=1'-0"

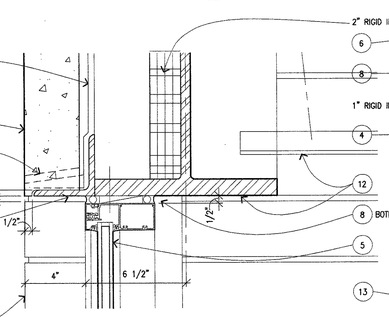

5 A401 DETAIL 3"=1'-0"

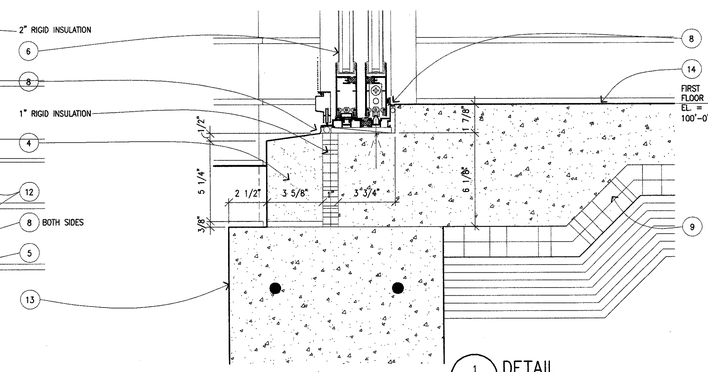

1 A401 DETAIL 3"=1'-0"

NEUMANN SMITH & ASSOCIATES

Architecture
Planning
Interior Design

400 Galleria Officentre
Suite 555
Southfield, Michigan 48034

248-352-8310
FAX 248-352-1821
NS@neumannsmith.com

Metro Lofts

Royal Oak, Michigan

KEYNOTES

1 UTILITY BRICK THROUGH-WALL UNIT WITH GALVANIZED HORIZONTAL WALL REINFORCING AT 16" O.C. VERTICAL - REFER TO STRUCTURAL DRAWINGS FOR VERTICAL REINFORCING AND GROUTING OF CORES.

2 UTILITY BRICK VENEER WITH ADJUSTABLE GALVANIZED BRICK TIES + AIR SPACE + 2" RIGID INSULATION.

3 PREFINISHED METAL SIDING ON METAL SUBGIRT SYSTEM OVER AIR INFILTRATION BARRIER OVER 1/2" EXTERIOR GYPSUM SHEATHING + 6" COLD FORMED METAL FRAMING AT 16" O.C. + 6" BLANKET INSULATION + VAPOR RETARDER + 5/8" GYPSUM BOARD INTERIOR FINISH.

4 CAST STONE

5 CLEAR INSULATING VISION GLASS IN WINDOW WALL SYSTEM NO. 1.

6 CLEAR ANODIZED ALUMINUM SLIDING GLASS DOOR UNIT WITH FIXED TRANSOM WITH CLEAR INSULATING VISION GLASS.

7 SINGLE PLY EPDM MEMBRANE ROOFING FULLY ADHERED OVER TWO LAYERS, MIN.3" OF POLYISOCYANURATE INSULATION MECHANICALLY FASTENED TO ROOF DECK.

8 SEALANT + BACKER ROD.

9 3" X 24" PERIMETER INSULATION

10 1/2" PREMOLDED JOINT FILLER + SEALANT

11 PRECAST CONCRETE PLANK WITH CONCRETE TOPPING

12 REFER TO STRUCTURAL DRAWINGS FOR DETAILS AND NOTES RELATING TO STEEL COLUMNS, BEAMS, JOISTS, BENT PLATES, ANGLES, OTHER STEEL SHAPES, CONCRETE ON METAL DECK FLOOR SYSTEMS AND ROOF DECK.

13 CONCRETE FOOTING/GRADE BEAM - REFER TO STRUCTURAL DRAWINGS FOR NOTES AND DETAILS.

14 CONCRETE FLOOR SLAB OVER VAPOR RETARDER ON COMPACTED GRANULAR FILL - REFER TO STRUCTURAL DRAWINGS FOR THICKNESS, REINFORCING AND RELATED NOTES AND DETAILS.

15 5/8" GYPSUM BOARD + VAPOR RETARDER ON 2" "Z" FURRING SYSTEM WITH 2" RIGID INSULATION.

Revisions

MAY 28, 2004 - ISSUED FOR BIDS

Date	☐ Preliminary
5-18-2004	■ Construction
Drawn	☐ Record
PTM / MDS	
Checked	
MGD	Do not scale
Approved	Use figured dimensions only
PTM	Copyright © 2003
Bidpak Number	

Job Number
23091

Title
Section Details

Scale: 3" = 1'-0"

Sheet
A410

F:\2003\23091 - Metro Lofts\30-Construction Documents\23091A410.dwg, 5/28/2004 4:04:51 PM, pat, Xerox 5100p-scanner.pc3, 1:1, Neumann/Smith & Assoc.

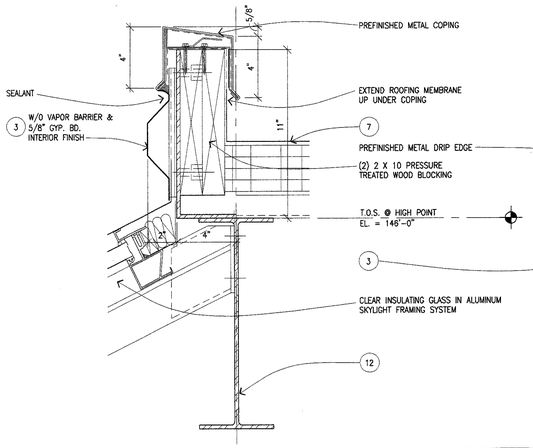

14 A403 DETAIL 3"=1'-0"

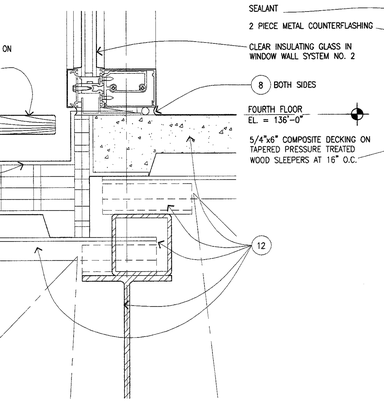

13 A403 DETAIL 3"=1'-0"

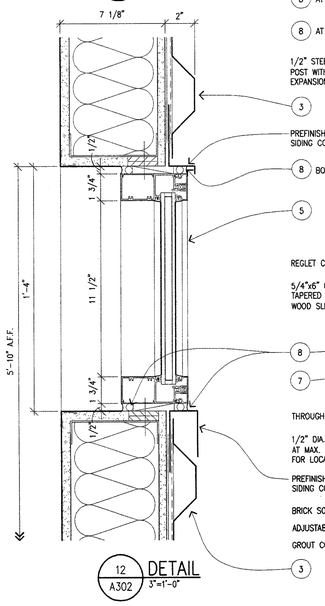

12 A302 DETAIL 3"=1'-0"

11 A406 NOT USED 3"=1'-0"

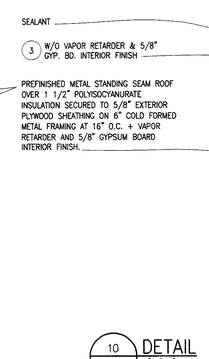

10 A403 DETAIL 3"=1'-0"

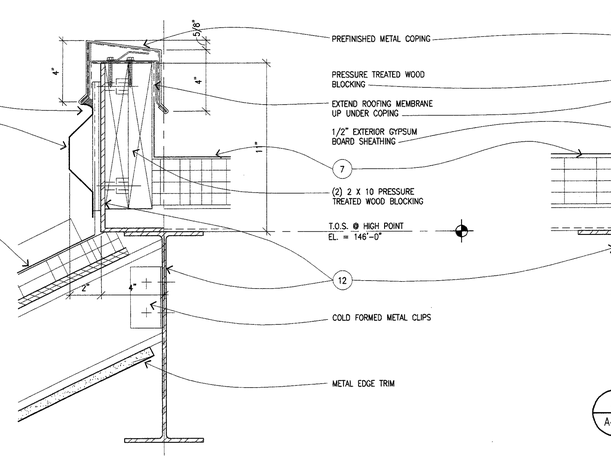

7 A403 DETAIL 3"=1'-0"

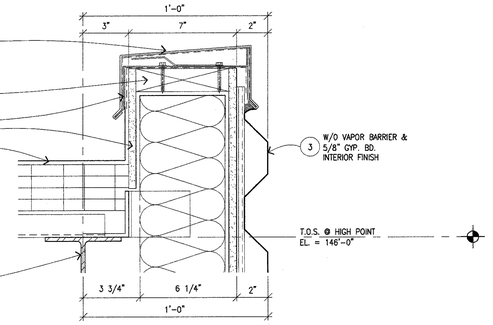

4 A403 DETAIL 3"=1'-0"

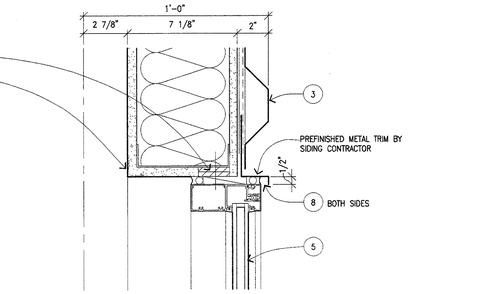

3 A403 DETAIL 3"=1'-0"

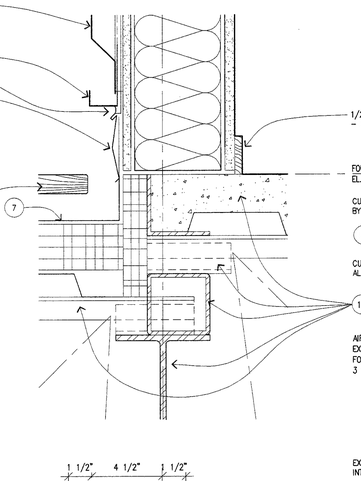

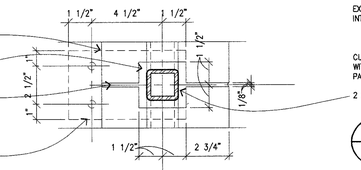

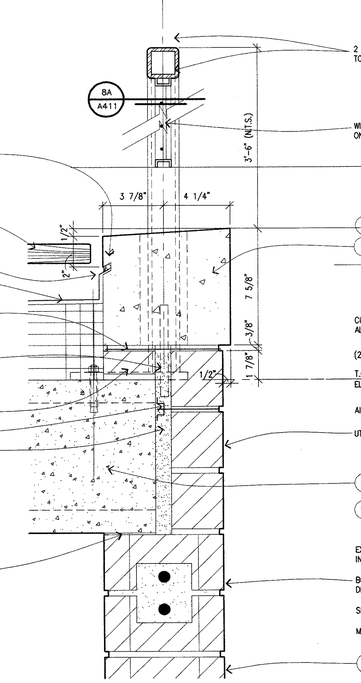

8A A411 PLAN DETAIL 3"=1'-0"

8 A405 DETAIL 3"=1'-0"

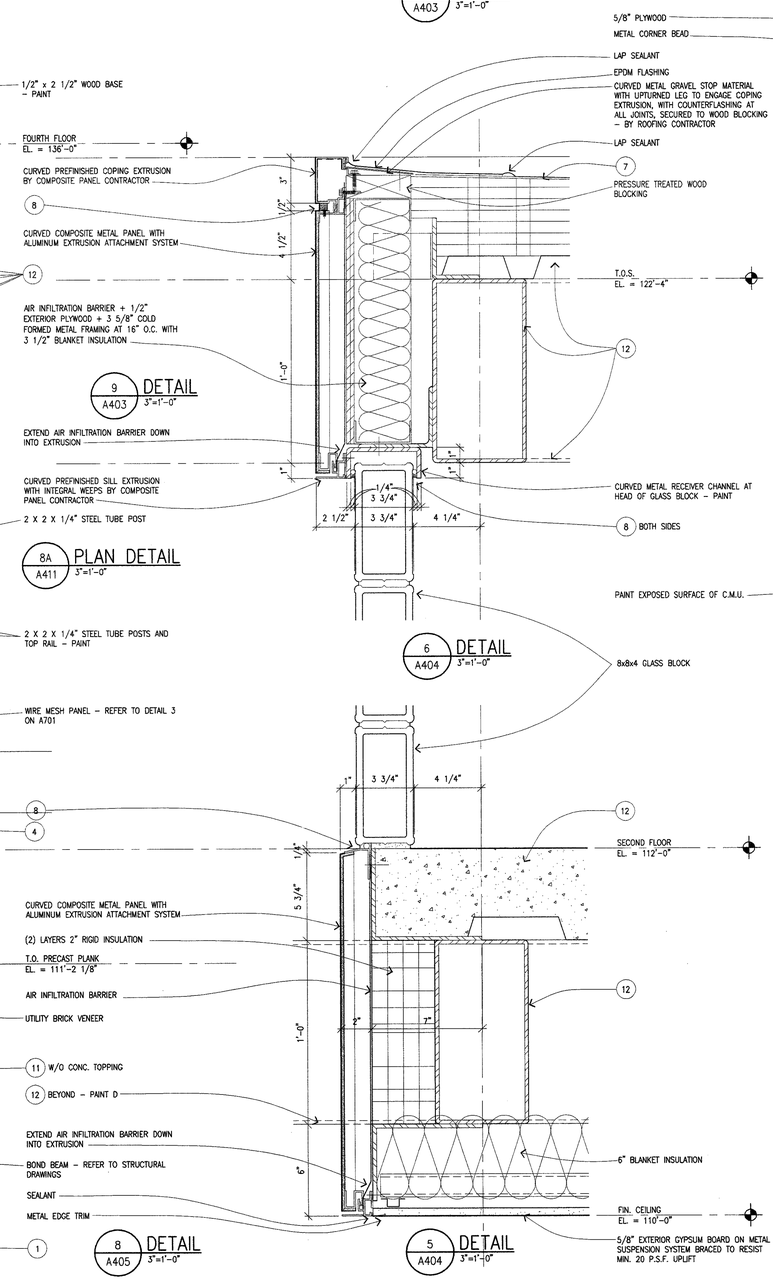

9 A403 DETAIL 3"=1'-0"

6 A404 DETAIL 3"=1'-0"

5 A404 DETAIL 3"=1'-0"

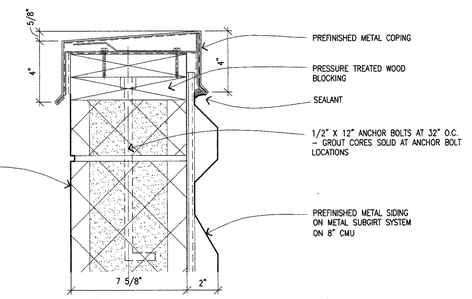

2 A405 DETAIL 3"=1'-0"

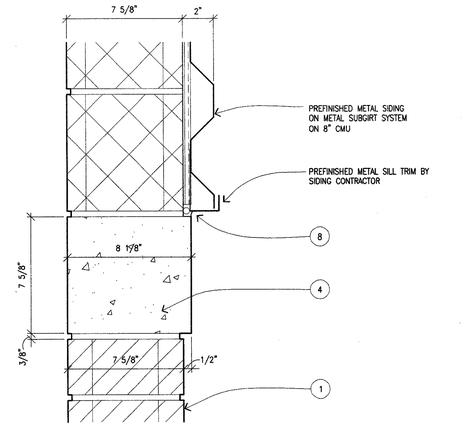

1 A405 DETAIL 3"=1'-0"

NEUMANN SMITH & ASSOCIATES

Architecture
Planning
Interior Design

400 Galleria Officentre
Suite 555
Southfield, Michigan 48034

248-352-8310
FAX 248-352-1821
NS@neumannsmith.com

Metro Lofts

Royal Oak, Michigan

KEYNOTES

1. UTILITY BRICK THROUGH-WALL UNIT WITH GALVANIZED HORIZONTAL WALL REINFORCING AT 16" O.C. VERTICAL – REFER TO STRUCTURAL DRAWINGS FOR VERTICAL REINFORCING AND GROUTING OF CORES.
2. UTILITY BRICK VENEER WITH ADJUSTABLE GALVANIZED BRICK TIES + AIR SPACE + 2" RIGID INSULATION.
3. PREFINISHED METAL SIDING ON METAL SUBGIRT SYSTEM OVER AIR INFILTRATION BARRIER OVER 1/2" EXTERIOR GYPSUM SHEATHING + 6" COLD FORMED METAL FRAMING AT 16" O.C. + 6" BLANKET INSULATION + VAPOR RETARDER + 5/8" GYPSUM BOARD INTERIOR FINISH.
4. CAST STONE.
5. CLEAR INSULATING VISION GLASS IN WINDOW WALL SYSTEM NO. 1.
6. CLEAR ANODIZED ALUMINUM SLIDING GLASS DOOR UNIT WITH FIXED TRANSOM WITH CLEAR INSULATING VISION GLASS.
7. SINGLE PLY EPDM MEMBRANE ROOFING FULLY ADHERED OVER TWO LAYERS (MIN.) OF POLYISOCYANURATE INSULATION MECHANICALLY FASTENED TO ROOF DECK.
8. SEALANT + BACKER ROD.
9. 2" X 24" PERIMETER INSULATION
10. 1/2" PREMOLDED JOINT FILLER + SEALANT
11. PRECAST CONCRETE PLANK WITH CONCRETE TOPPING
12. REFER TO STRUCTURAL DRAWINGS FOR DETAILS AND NOTES RELATING TO STEEL COLUMNS, BEAMS, JOISTS, BENT PLATES, ANGLES, OTHER STEEL SHAPES, CONCRETE ON METAL DECK FLOOR SYSTEMS AND ROOF DECK.
13. CONCRETE FOOTING/GRADE BEAM – REFER TO STRUCTURAL DRAWINGS FOR NOTES AND DETAILS.
14. CONCRETE FLOOR SLAB OVER VAPOR RETARDER ON COMPACTED GRANULAR FILL – REFER TO STRUCTURAL DRAWINGS FOR THICKNESS, REINFORCING AND RELATED NOTES AND DETAILS.
15. 5/8" GYPSUM BOARD + VAPOR RETARDER ON 2" 'Z' FURRING SYSTEM WITH 2" RIGID INSULATION.

Revisions

MAY 28, 2004 – ISSUED FOR BIDS

Date
5-18-2004
Drawn
PTM / MDS
Checked
MGD
Approved
PTM
Bidpak Number

☐ Preliminary
■ Construction
☐ Record

Do not scale
Use figured dimensions only
Copyright © 2003

Job Number
23091
Title
Section Details

Scale: 3" = 1'-0"

Sheet
A411

F:\2003\23091 - Metro Lofts\30-Construction Documents\23091A411.dwg, 5/28/2004 4:34:31 PM, pat, Xerox 5100dp-scanner.pc3, 1:1, Neumann/Smith & Assoc.

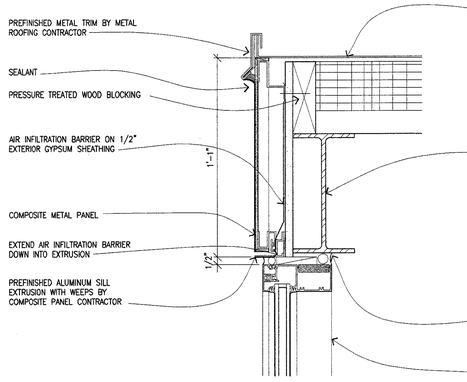

12 A408 DETAIL 3"=1'-0"

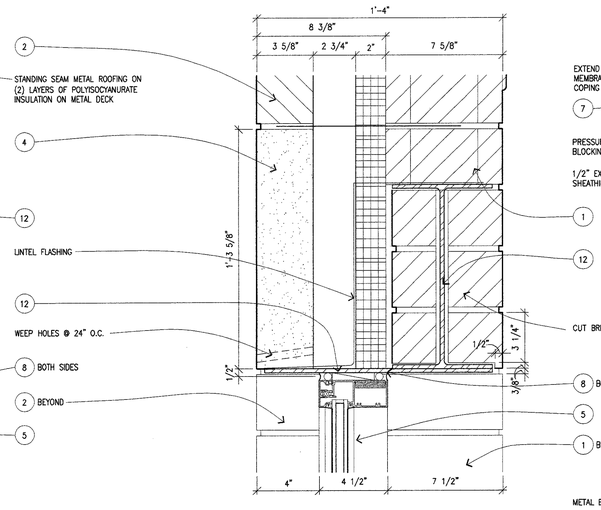

8 A406 DETAIL 3"=1'-0"

407

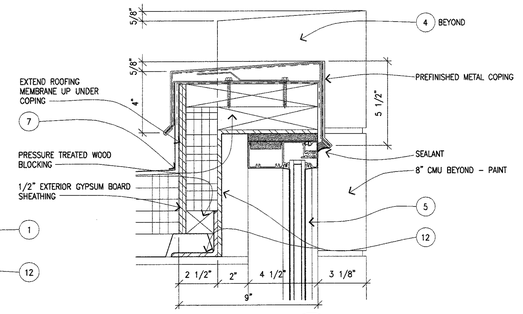

5 A406 DETAIL 3"=1'-0"

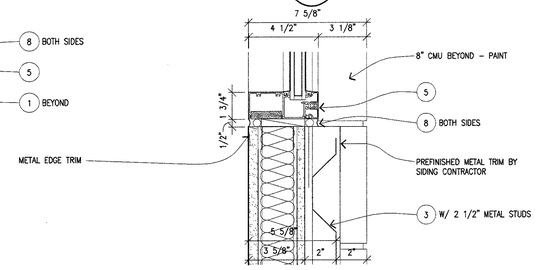

4 A406 DETAIL 3"=1'-0"

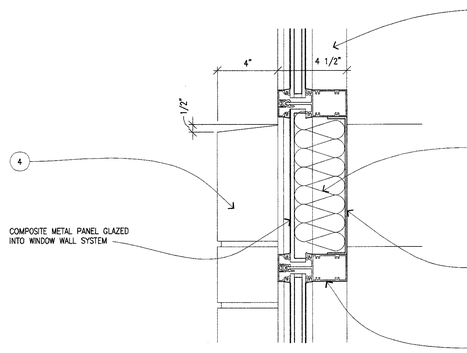

11 A408 DETAIL 3"=1'-0"

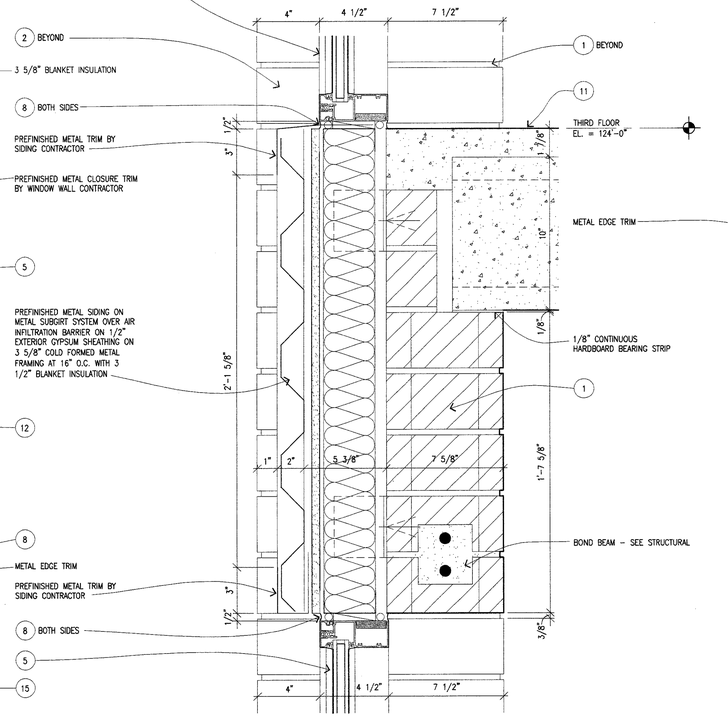

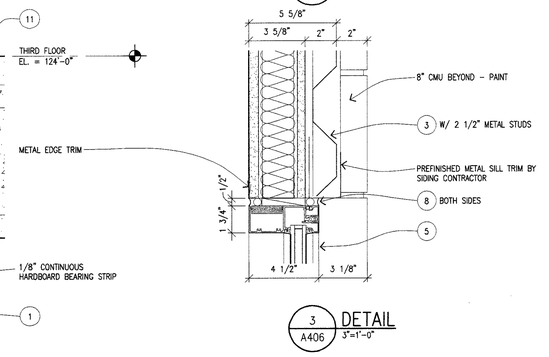

3 A406 DETAIL 3"=1'-0"

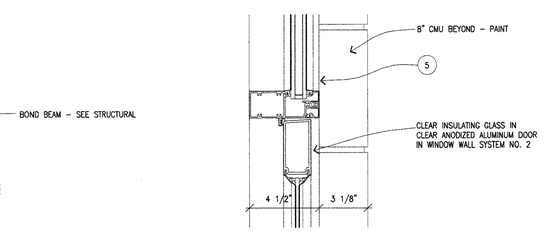

2 A406 DETAIL 3"=1'-0"

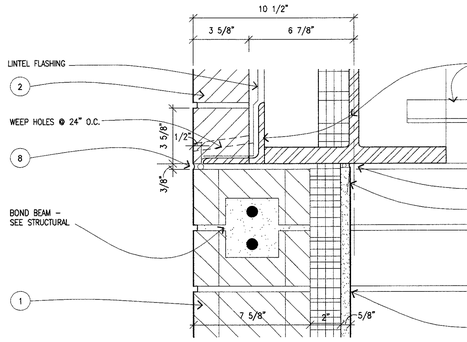

10 A401 DETAIL 3"=1'-0"

6 A407 DETAIL 3"=1'-0"

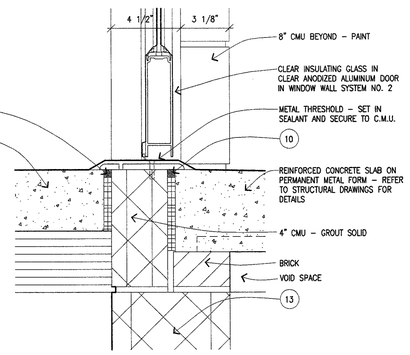

1 A406 DETAIL 3"=1'-0"

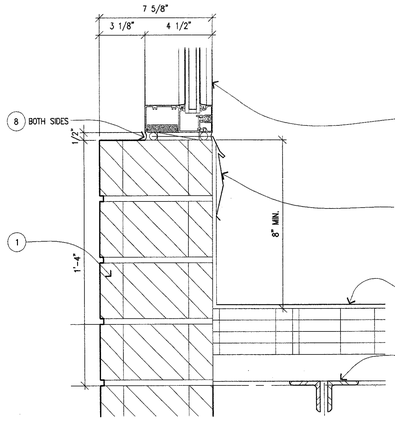

13 A408 DETAIL 3"=1'-0"

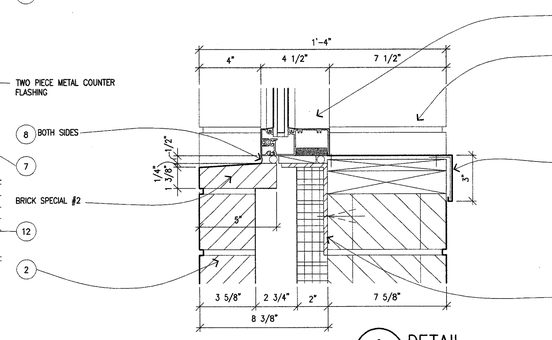

9 A407 DETAIL 3"=1'-0"

NEUMANN SMITH & ASSOCIATES

Architecture
Planning
Interior Design

400 Galleria Officentre
Suite 555
Southfield, Michigan 48034

248-352-8310
FAX 248-352-1821
NS@neumannsmith.com

Metro Lofts

Royal Oak, Michigan

KEYNOTES

1. UTILITY BRICK THROUGH-WALL UNIT WITH GALVANIZED HORIZONTAL WALL REINFORCING AT 16" O.C. VERTICAL – REFER TO STRUCTURAL DRAWINGS FOR VERTICAL REINFORCING AND GROUTING OF CORES.
2. UTILITY BRICK VENEER WITH ADJUSTABLE GALVANIZED BRICK TIES + AIR SPACE + 2" RIGID INSULATION.
3. PREFINISHED METAL SIDING ON METAL SUBGIRT SYSTEM OVER AIR INFILTRATION BARRIER OVER 1/2" EXTERIOR GYPSUM SHEATHING + 6" COLD FORMED METAL FRAMING AT 16" O.C. + 6" BLANKET INSULATION + VAPOR RETARDER + 5/8" GYPSUM BOARD INTERIOR FINISH.
4. CAST STONE
5. CLEAR INSULATING VISION GLASS IN WINDOW WALL SYSTEM NO. 1.
6. CLEAR ANODIZED ALUMINUM SLIDING GLASS DOOR UNIT WITH FIXED TRANSOM WITH CLEAR INSULATING VISION GLASS.
7. SINGLE PLY EPDM MEMBRANE ROOFING FULLY ADHERED OVER TWO LAYERS (MIN.) OF POLYISOCYANURATE INSULATION MECHANICALLY FASTENED TO ROOF DECK.
8. SEALANT + BACKER ROD.
9. 2" X 24" PERIMETER INSULATION
10. 1/2" PREMOLDED JOINT FILLER + SEALANT
11. PRECAST CONCRETE PLANK WITH CONCRETE TOPPING
12. REFER TO STRUCTURAL DRAWINGS FOR DETAILS AND NOTES RELATING TO STEEL COLUMNS, BEAMS, JOISTS, BENT PLATES, ANGLES, OTHER STEEL SHAPES, CONCRETE ON METAL DECK FLOOR SYSTEMS AND ROOF DECK.
13. CONCRETE FOOTING/GRADE BEAM – REFER TO STRUCTURAL DRAWINGS FOR NOTES AND DETAILS.
14. CONCRETE FLOOR SLAB OVER VAPOR RETARDER ON COMPACTED GRANULAR FILL – REFER TO STRUCTURAL DRAWINGS FOR THICKNESS, REINFORCING AND RELATED NOTES AND DETAILS.
15. 5/8" GYPSUM BOARD + VAPOR RETARDER ON 2" 'Z' FURRING SYSTEM WITH 2" RIGID INSULATION.

Revisions

STATE OF MICHIGAN — REGISTERED ARCHITECT

MAY 28, 2004 – ISSUED FOR BIDS

Date
5-18-2004
Drawn
PTM / MDS
Checked
MGD
Approved
PTM
Bidpak Number

☐ Preliminary
■ Construction
☐ Record

Do not scale
Use figured dimensions only
Copyright © 2003

Job Number
23091
Title
Section Details

Scale: 3" = 1'-0"

Sheet
A412

F:\2003\23091 - Metro Lofts\30-Construction Documents\23091A412.dwg, 6/1/2004 8:55:00 AM, pat_Xerox 510dp scanner.pc3, 1:1, Neumann/Smith & Assoc.

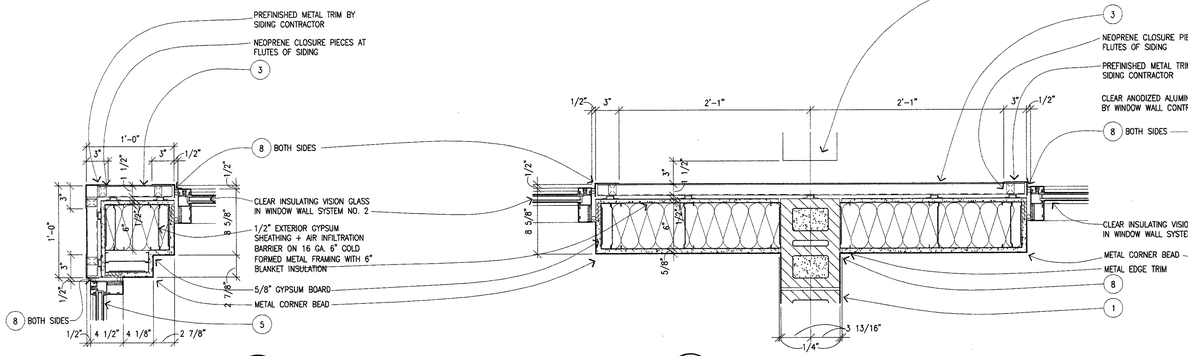

16 A216 PLAN DETAIL
1 1/2"=1'-0"
217

12 A216 PLAN DETAIL
1 1/2"=1'-0"
217

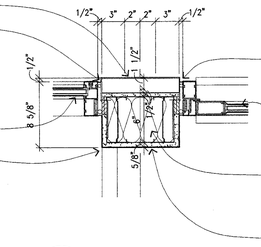

8 A216 PLAN DETAIL
1 1/2"=1'-0"
217

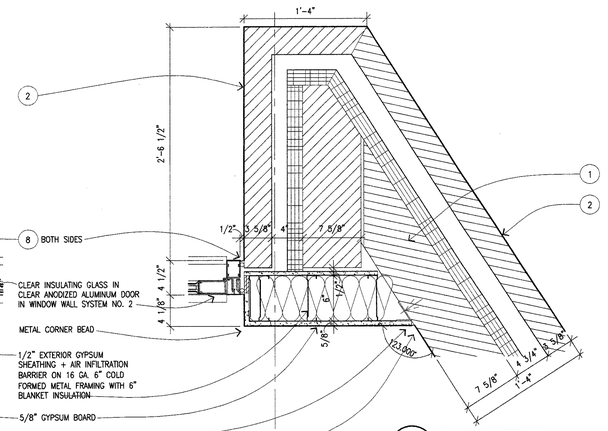

4 A216 PLAN DETAIL
1 1/2"=1'-0"

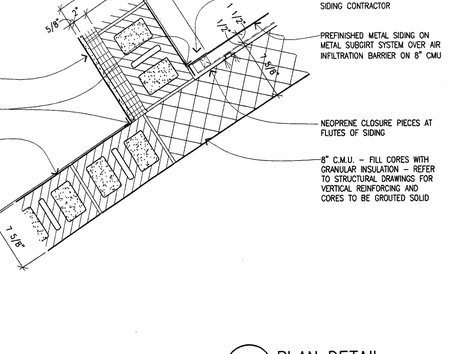

15 A210 PLAN DETAIL
1 1/2"=1'-0"
211, 212, 213, 214, 215

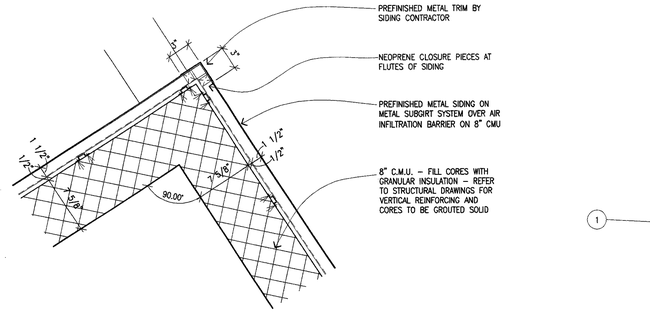

11 A210 PLAN DETAIL
1 1/2"=1'-0"
211, 212, 213, 214, 215

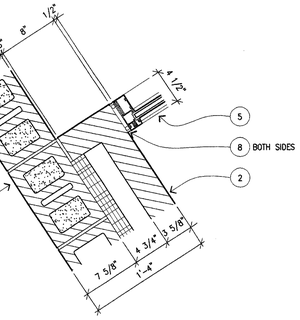

7 A210 PLAN DETAIL
1 1/2"=1'-0"
211, 212, 213, 214, 215

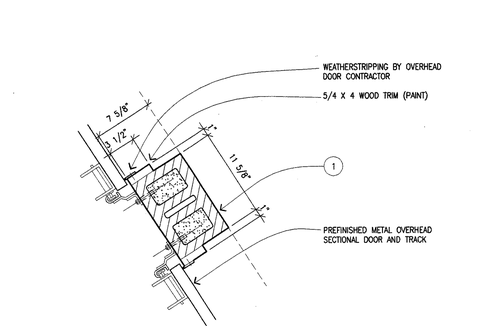

3 A217 PLAN DETAIL
1 1/2"=1'-0"

14 A210 PLAN DETAIL
1 1/2"=1'-0"
211, 212, 213, 214, 215, 216, 217

10 A211 PLAN DETAIL
1 1/2"=1'-0"

6 A211 PLAN DETAIL
1 1/2"=1'-0"

2 A212 NOT USED
1 1/2"=1'-0"

13 A212 PLAN DETAIL
1 1/2"=1'-0"

9 A202 PLAN DETAIL
1 1/2"=1'-0"

5 A210 PLAN DETAIL
1 1/2"=1'-0"
211

1 A201 PLAN DETAIL
1 1/2"=1'-0"

NEUMANN SMITH & ASSOCIATES

Architecture
Planning
Interior Design

400 Galleria Officentre
Suite 555
Southfield, Michigan 48034

248-352-8310
FAX 248-352-1821
NS@neumannsmith.com

Metro Lofts
Royal Oak, Michigan

KEYNOTES

1 UTILITY BRICK THROUGH-WALL UNIT WITH GALVANIZED HORIZONTAL WALL REINFORCING AT 16" O.C. VERTICAL - REFER TO STRUCTURAL DRAWINGS FOR VERTICAL REINFORCING AND GROUTING OF CORES.

2 UTILITY BRICK VENEER WITH ADJUSTABLE GALVANIZED BRICK TIES + AIR SPACE + 2" RIGID INSULATION.

3 PREFINISHED METAL SIDING ON METAL SUBGIRT SYSTEM OVER AIR INFILTRATION BARRIER OVER 1/2" EXTERIOR GYPSUM SHEATHING + 6" COLD FORMED METAL FRAMING AT 16" O.C. + 6" BLANKET INSULATION + VAPOR RETARDER + 5/8" GYPSUM BOARD INTERIOR FINISH.

4 CAST STONE

5 CLEAR INSULATING VISION GLASS IN WINDOW WALL SYSTEM NO. 1.

6 CLEAR ANODIZED ALUMINUM SLIDING GLASS DOOR UNIT WITH FIXED TRANSOM WITH CLEAR INSULATING VISION GLASS.

7 SINGLE PLY EPDM MEMBRANE ROOFING FULLY ADHERED OVER TWO LAYERS (MIN.) OF POLYISOCYANURATE INSULATION MECHANICALLY FASTENED TO ROOF DECK.

8 SEALANT + BACKER ROD.

9 2" X 24" PERIMETER INSULATION

10 1/2" PRECMOLDED JOINT FILLER + SEALANT

11 PRECAST CONCRETE PLANK WITH CONCRETE TOPPING

12 REFER TO STRUCTURAL DRAWINGS FOR DETAILS AND NOTES RELATING TO STEEL COLUMNS, BEAMS, JOISTS, BENT PLATES, ANGLES, OTHER STEEL SHAPES, CONCRETE ON METAL DECK FLOOR SYSTEMS AND ROOF DECK.

13 CONCRETE FOOTING/GRADE BEAM - REFER TO STRUCTURAL DRAWINGS FOR NOTES AND DETAILS.

14 CONCRETE FLOOR SLAB OVER VAPOR RETARDER ON COMPACTED GRANULAR FILL - REFER TO STRUCTURAL DRAWINGS FOR THICKNESS, REINFORCING AND RELATED NOTES AND DETAILS.

15 5/8" GYPSUM BOARD + VAPOR RETARDER ON 2" "Z" FURRING SYSTEM WITH 2" RIGID INSULATION.

Revisions

STATE OF MICHIGAN
LAWRENCE P. SMITH
ARCHITECT

MAY 28, 2004 - ISSUED FOR BIDS
MAY 13, 2004 - ISSUED FOR MASONRY PRICING

Date
4-5-2004
Drawn
PTM
Checked
MGD
Approved
PTM
Bidpak Number

☐ Preliminary
■ Construction
☐ Record

Do not scale
Use figured dimensions only
Copyright © 2003

Job Number
23091
Title
Plan Details

Scale: 1 1/2" = 1'-0"
Sheet
A420

F:\2003\23091 - Metro Lofts\30-Construction Documents\23091A420.dwg, 5/28/2004 4:03:28 PM, pat, Xerox 510dp scanner.pc3, 1:1, Neumann\Smith & Assoc.

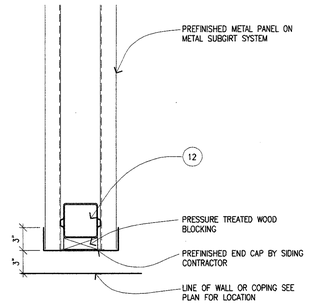

4 / A216 — 217

TYPICAL PLAN DETAIL TERRACE DIVIDING WALL ENDS

1 1/2"=1'-0"

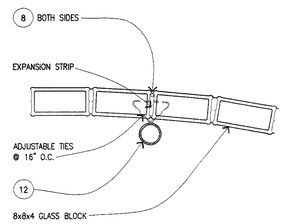

3 / A212

PLAN DETAIL

1 1/2"=1'-0"

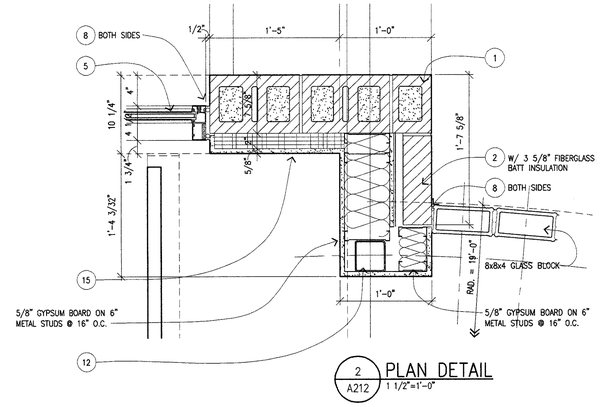

2 / A212

PLAN DETAIL

1 1/2"=1'-0"

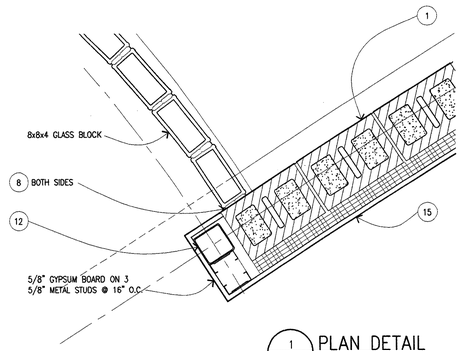

1 / A212

PLAN DETAIL

1 1/2"=1'-0"

NEUMANN SMITH & ASSOCIATES

Architecture
Planning
Interior Design

400 Galleria Officentre
Suite 555
Southfield, Michigan 48034

248-352-8310
FAX 248-352-1821
NS@neumannsmith.com

Metro Lofts

Royal Oak, Michigan

KEYNOTES

1. UTILITY BRICK THROUGH-WALL UNIT WITH GALVANIZED HORIZONTAL WALL REINFORING AT 16" O.C. VERTICAL - REFER TO STRUCTURAL DRAWINGS FOR VERTICAL REINFORCING AND GROUTING OF CORES.
2. UTILITY BRICK VENEER WITH ADJUSTABLE GALVANIZED BRICK TIES + AIR SPACE + 2" RIGID INSULATION.
3. PREFINISHED METAL SIDING ON METAL SUBGIRT SYSTEM OVER AIR INFILTRATION BARRIER OVER 1/2" EXTERIOR GYPSUM SHEATHING + 6" COLD FORMED METAL FRAMING AT 16" O.C. + 6" BLANKET INSULATION + VAPOR RETARDER + 5/8" GYPSUM BOARD INTERIOR FINISH.
4. CAST STONE
5. CLEAR INSULATING VISION GLASS IN WINDOW WALL SYSTEM NO. 1.
6. CLEAR ANODIZED ALUMINUM SLIDING GLASS DOOR UNIT WITH FIXED TRANSOM WITH CLEAR INSULATING VISION GLASS.
7. SINGLE PLY EPDM MEMBRANE ROOFING FULLY ADHERED OVER TWO LAYERS (MIN.) OF POLYISOCYANURATE INSULATION MECHANICALLY FASTENED TO ROOF DECK.
8. SEALANT + BACKER ROD.
9. 2" X 24" PERIMETER INSULATION.
10. 1/2" PREMOLDED JOINT FILLER + SEALANT
11. PRECAST CONCRETE PLANK WITH CONCRETE TOPPING
12. REFER TO STRUCTURAL DRAWINGS FOR DETAILS AND NOTES RELATING TO STEEL COLUMNS, BEAMS, JOISTS, BEAM PLATES, ANGLES, OTHER STEEL SHAPES, CONCRETE OR METAL DECK FLOOR SYSTEMS AND ROOF DECK.
13. CONCRETE FOOTING/GRADE BEAM - REFER TO STRUCTURAL DRAWINGS FOR NOTES AND DETAILS.
14. CONCRETE FLOOR SLAB OVER VAPOR RETARDER ON COMPACTED GRANULAR FILL - REFER TO STRUCTURAL DRAWINGS FOR THICKNESS, REINFORCING AND RELATED NOTES AND DETAILS.
15. 5/8" GYPSUM BOARD + VAPOR RETARDER ON 2" "Z" FURRING SYSTEM WITH 2" RIGID INSULATION.

Revisions

STATE OF MICHIGAN — LICENSED ARCHITECT

MAY 28, 2004 - ISSUED FOR BIDS

Date
5-28-2004
Drawn
MGD
Checked
MGD
Approved
PTM
Bidpak Number

☐ Preliminary
■ Construction
☐ Record

Do not scale
Use figured dimensions only
Copyright © 2003

Job Number
23091
Title
Plan Details

Scale: 1 1/2" = 1'-0"

Sheet
A421

F:\2003\23091 - Metro Lofts\30-Construction Documents\23091A421.dwg, 5/28/2004 4:03:08 PM, pat, Xerox 510dp scanner.pc3, 1:1, Neumann/Smith & Assoc.

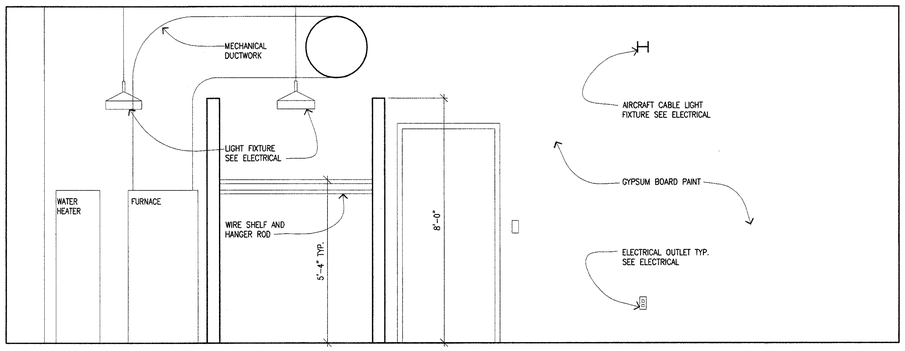

11 A210 ELEVATION 1/2" =1'-0"
211, 212, 213, 214, 215

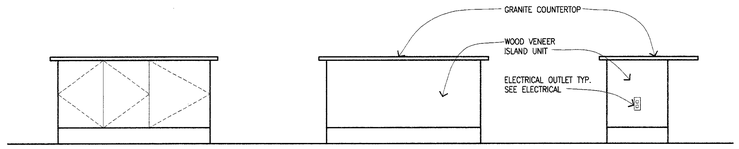

10 A210 ISLAND ELEVATION 1/2" =1'-0"
211, 212, 213, 214, 215

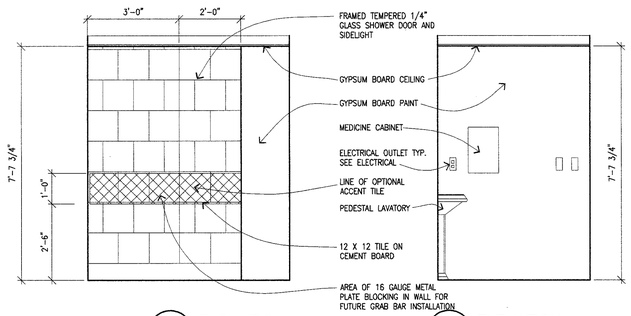

9 A210 ELEVATION 1/2" =1'-0"
211, 212, 213, 214, 215

8 A210 ELEVATION 1/2" =1'-0"
211, 212, 213, 214, 215

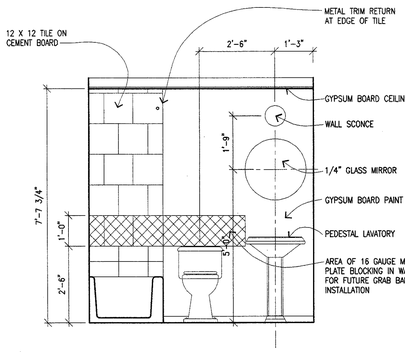

7 A210 ELEVATION 1/2" =1'-0"
211, 212, 213, 214, 215

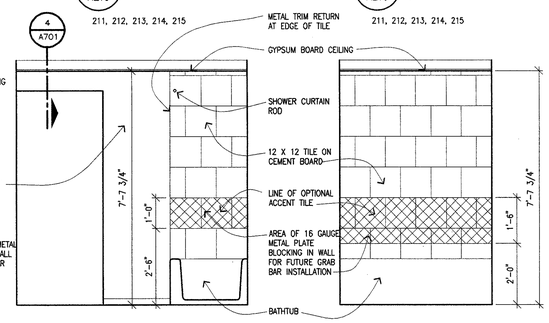

6 A210 ELEVATION 1/2" =1'-0"
211, 212, 213, 214, 215

5 A210 ELEVATION 1/2" =1'-0"
211, 212, 213, 214, 215

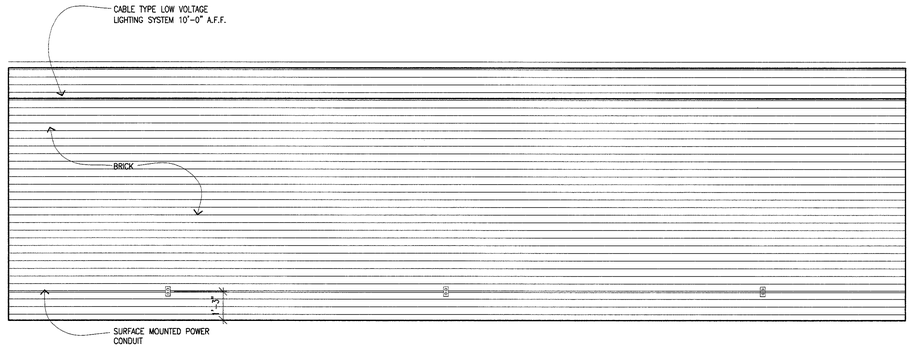

4 A210 ELEVATION 3/8" =1'-0"
211, 212, 213, 214, 215

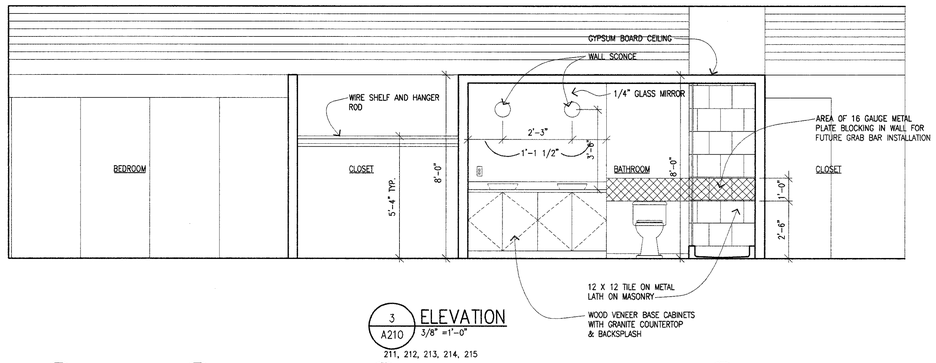

3 A210 ELEVATION 3/8" =1'-0"
211, 212, 213, 214, 215

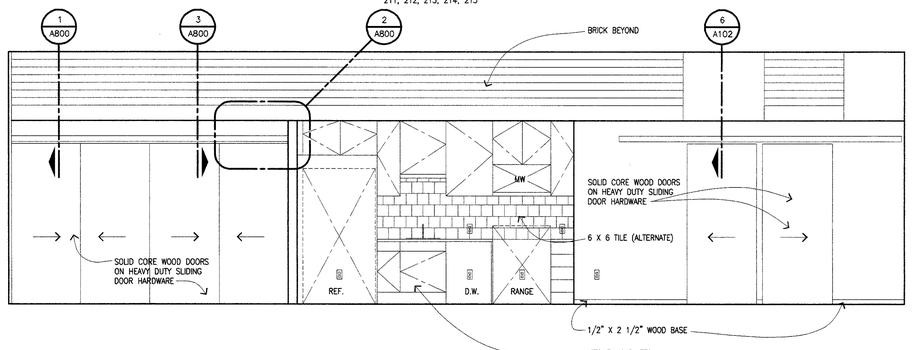

2 A210 ELEVATION 3/8" =1'-0"
211, 212, 213, 214, 215

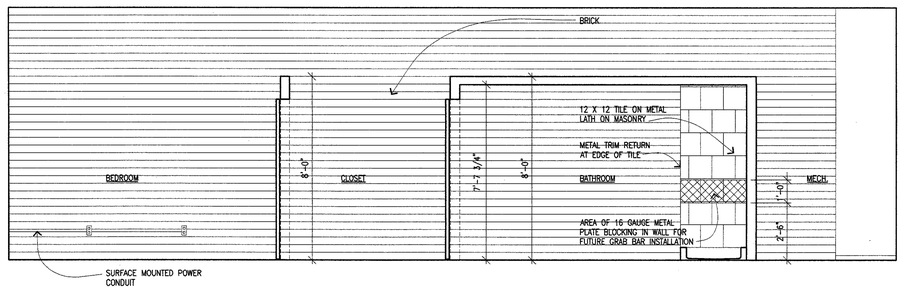

1 A210 ELEVATION 3/8" =1'-0"
211, 212, 213, 214, 215

NEUMANN SMITH & ASSOCIATES

Architecture
Planning
Interior Design

400 Galleria Officentre
Suite 555
Southfield, Michigan 48034

248-352-8310
FAX 248-352-1821
NS@neumannsmith.com

Metro Lofts
Royal Oak, Michigan

Revisions

MAY 28, 2004 – ISSUED FOR BIDS
MAY 13, 2004 – ISSUED FOR MASONRY PRICING

Date
3-17-2004
Drawn
MGD
Checked
MGD
Approved
PTM
Bidpak Number

☐ Preliminary
■ Construction
☐ Record

Do not scale
Use figured dimensions only
Copyright © 2003

Job Number
23091
Title
INTERIOR ELEVATIONS

Scale: AS NOTED

Sheet
A700

F:\23091\23091 - Metro Lofts\30 Construction Documents\23091A700.dwg, 5/28/2004 4:02:45 PM, pat, Xerox 5100dp-scanner pc3, 1:1, Neumann/Smith & Assoc.

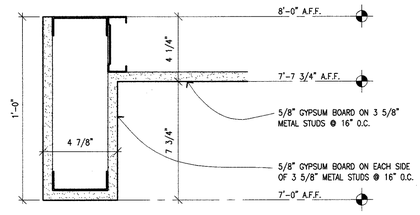

4 / A700 CEILING DETAIL AT BATHS
3" = 1'-0"

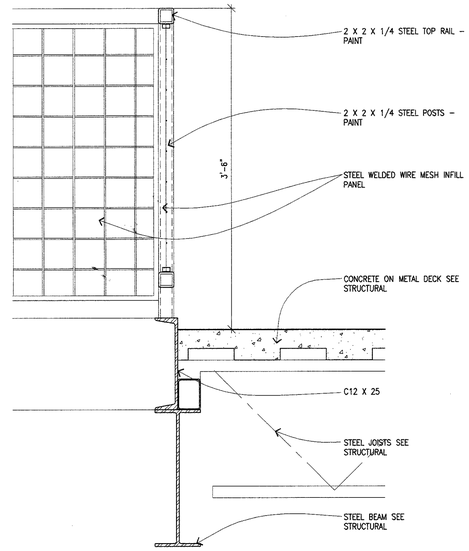

3 / A310 311 DETAIL AT FOURTH FLOOR RAIL
1/4" = 1'-0"

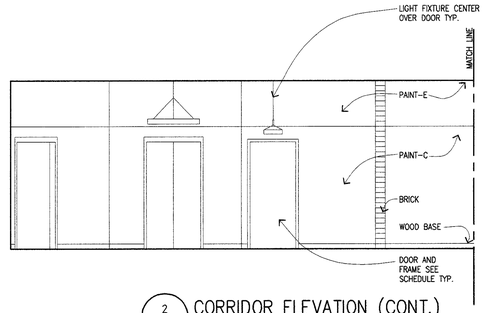

2 / A201 202, 203 CORRIDOR ELEVATION (CONT.)
1/4" = 1'-0"

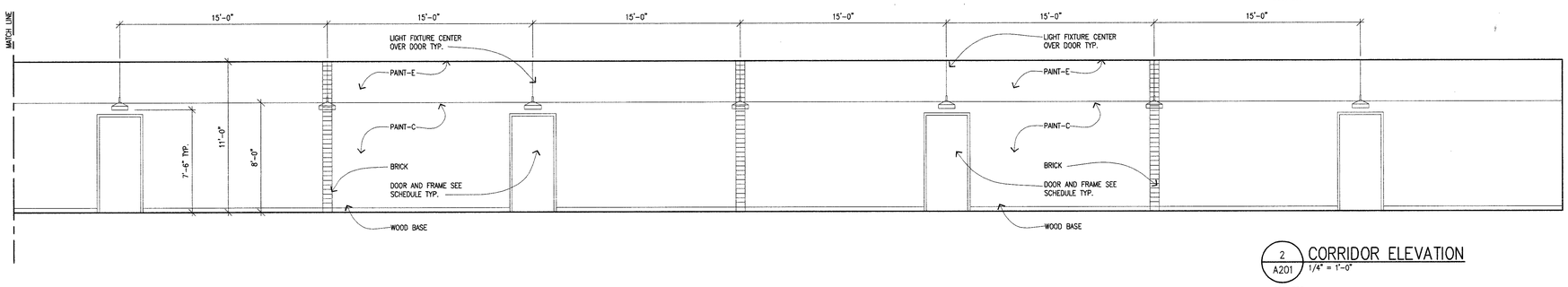

2 / A201 202, 203 CORRIDOR ELEVATION
1/4" = 1'-0"

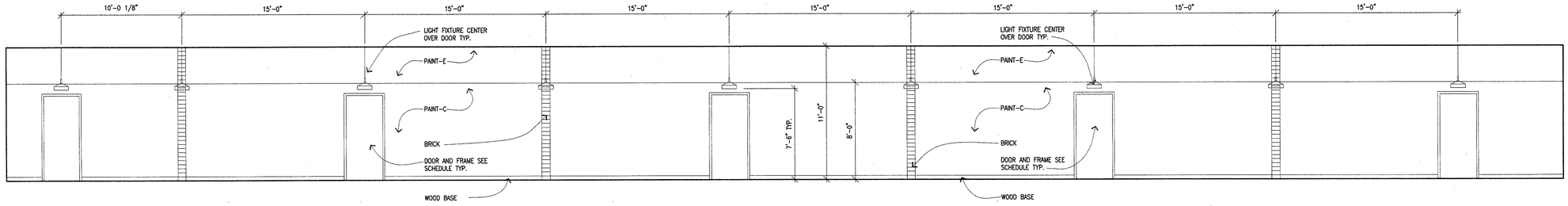

1 / A7201 202, 203 CORRIDOR ELEVATION
1/4" = 1'-0"

NEUMANN SMITH & ASSOCIATES

Architecture
Planning
Interior Design

400 Galleria Officentre
Suite 555
Southfield, Michigan 48034

248-352-8310
FAX 248-352-1821
NS@neumannsmith.com

Metro Lofts
Royal Oak, Michigan

Revisions

STATE OF MICHIGAN — LAWRENCE SMITH — ARCHITECT

MAY 28, 2004 – ISSUED FOR BIDS

Date
4-1-2004
Drawn
MGD
Checked
MGD
Approved
PTM
Bidpak Number

☐ Preliminary
■ Construction
☐ Record

Do not scale
Use figured dimensions only
Copyright © 2003

Job Number
23091
Title
INTERIOR ELEVATIONS

Scale: 1/4" = 1'-0"
Sheet
A701

F:\2003\23091 - Metro Lofts\3D-Construction Documents\23091A701.dwg, 5/28/2004 4:02:25 PM, pat, Xerox 5100dp-scanner.pc3, 1:1, Neumann/Smith & Assoc.

NEUMANN
SMITH
& ASSOCIATES

Architecture
Planning
Interior Design

400 Galleria Officentre
Suite 555
Southfield, Michigan 48034

248-352-8310
FAX 248-352-1821
NS@neumannsmith.com

Metro Lofts
Royal Oak, Michigan

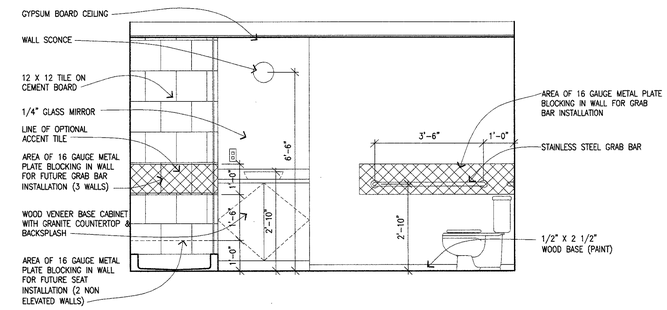

6 A218 ELEVATION 1/2" =1'-0"

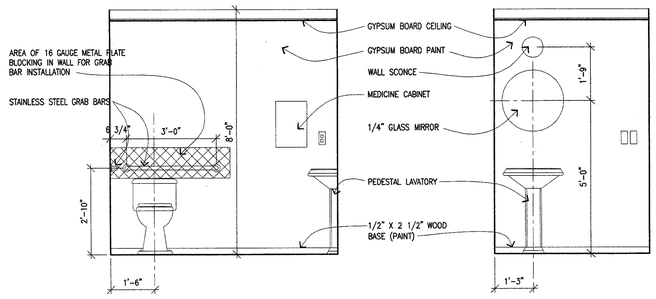

5 A218 ELEVATION 1/2" =1'-0"

4 A218 ELEVATION 1/2" =1'-0"

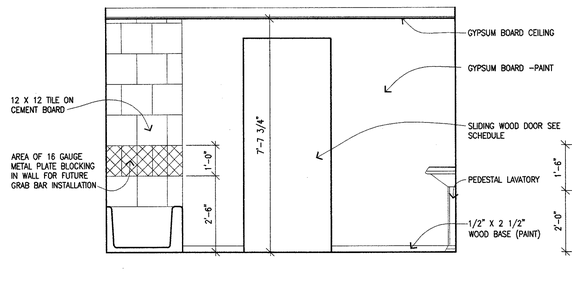

3 A210 ELEVATION 1/2" =1'-0"

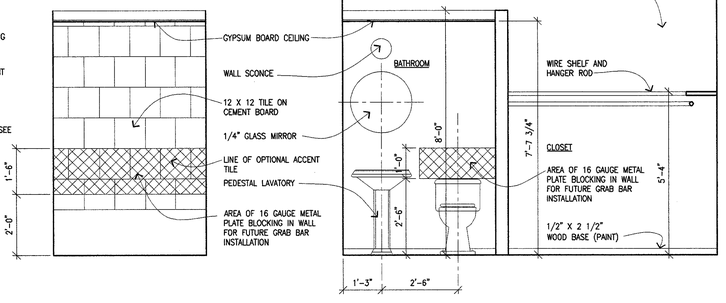

2 A210 ELEVATION 1/2" =1'-0"

1 A210 ELEVATION 1/2" =1'-0"

Revisions

MAY 28, 2004 – ISSUED FOR BIDS

Date	☐ Preliminary
3-17-2004	■ Construction
Drawn	☐ Record
MGD	
Checked	**Do not scale**
MGD	Use figured dimensions only
Approved	Copyright © 2003
PTM	
Bidpak Number	

Job Number
23091

Title
INTERIOR ELEVATIONS

Scale: as noted

Sheet
A702

F:\2003\23091 - Metro Lofts\99-Construction Documents\23091A702.dwg, 5/28/2004 4:02:05 PM, pat, Xerox 510dp-scanner.pc3, 1:1, Neumann/Smith & Assoc.

NEUMANN
SMITH
& ASSOCIATES

Architecture
Planning
Interior Design

400 Galleria Officentre
Suite 555
Southfield, Michigan 48034

248-352-8310
FAX 248-352-1821
NS@neumannsmith.com

Metro Lofts
Royal Oak, Michigan

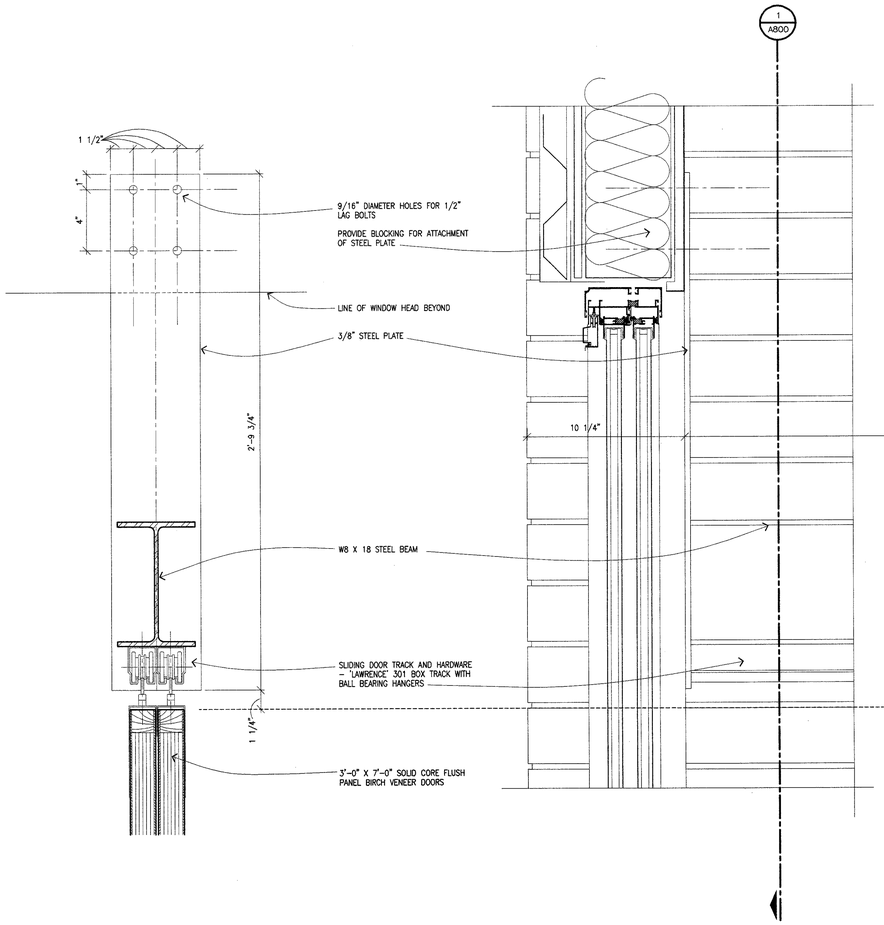

1 A700 DETAIL
3" =1'-0"
800

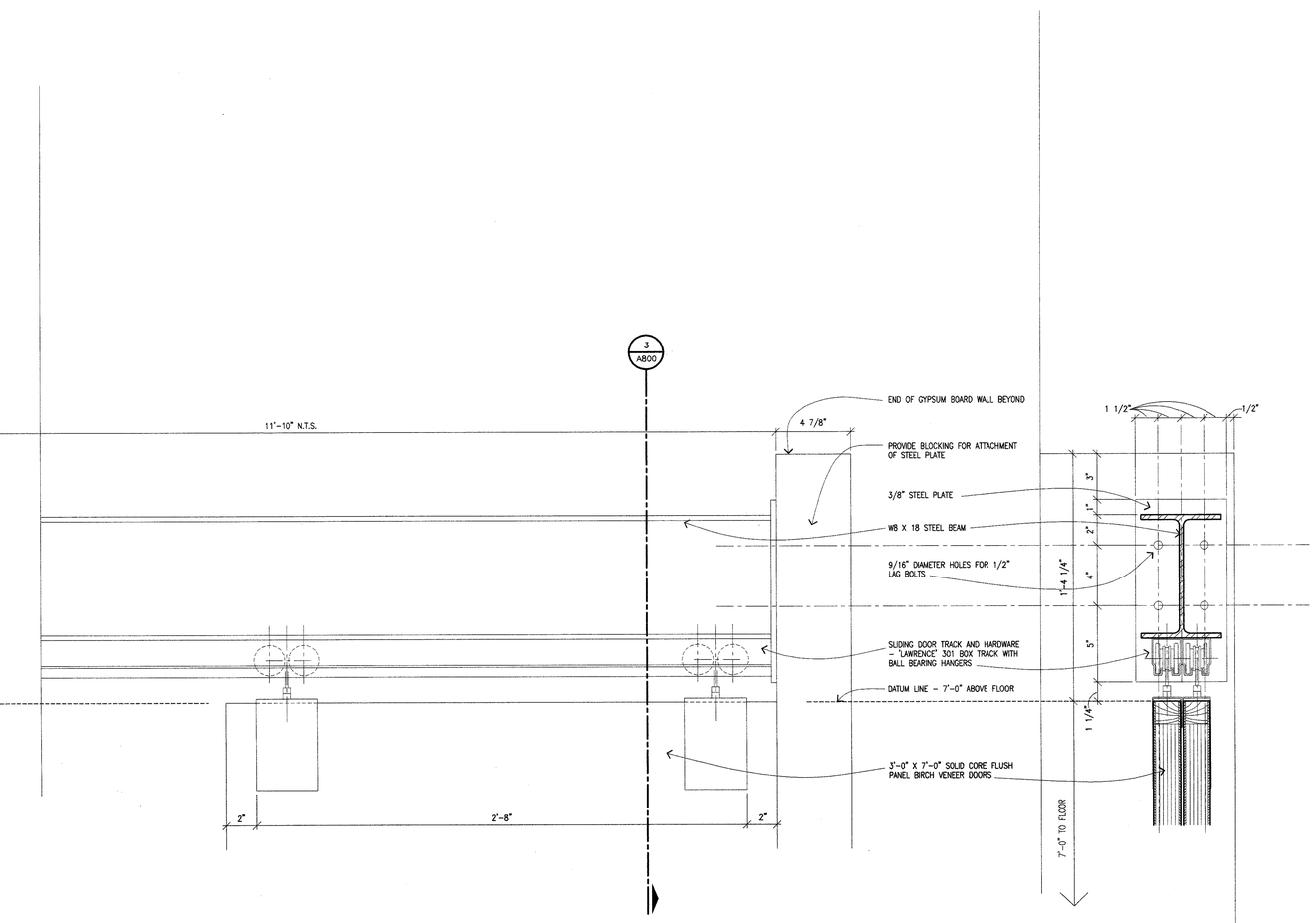

2 A700 PARTIAL ELEVATION
3" =1'-0"

3 A700 DETAIL
3" =1'-0"
800

Revisions

MAY 28, 2004 - ISSUED FOR BIDS

Date
5-19-2004
Drawn
PTM
Checked
MGD
Approved
PTM
Bidpak Number

☐ Preliminary
■ Construction
☐ Record

Do not scale
Use figured dimensions only
Copyright © 2003

Job Number
23091
Title
INTERIOR DETAILS

Scale: 3" = 1'-0"
Sheet
A800

F:\2003\23091 - Metro Lofts\30-Construction Documents\230914800.dwg, 5/28/2004 4:01:23 PM, pat_Xerox 5100ps-scanner.pc3, 1:1, Neumann/Smith & Assoc.

GENERAL NOTES (CONTINUED)

14. ALL BEAMS SUPPORTING MASONRY, INCLUDING STEEL, PRECAST AND MASONRY LINTELS ARE TO BEAR 8" (MIN.) ON 3 COURSES SOLID MASONRY.

15. STRUCTURAL STEEL BEAMS, WIDE FLANGE AND TUBE STEEL LINTELS SHALL BE PROVIDED WITH MIN. 7"x3/8"x0-7" BEARING PLATE, SET 1" AWAY FROM FACE OF WALL, WITH 2-3/4" DIAMETER ANCHOR BOLTS EACH END, TYPICAL UNLESS NOTED OTHERWISE.

16. UNLESS NOTED OTHERWISE, PROVIDE LOOSE LINTELS AT MISCELLANEOUS ARCHITECTURAL, MECHANICAL AND ELECTRICAL OPENINGS FOR EACH 4" OF MASONRY WALL THICKNESS IN ACCORDANCE WITH THE FOLLOWING:

- L4x3-1/2x5/16 LLV FOR SPANS UP TO 3'-4"
- L5x3-1/2x5/16 LLV FOR SPANS UP TO 5'-4"
- L6x3-1/2x5/16 LLV FOR SPANS UP TO 6'-8" MAX.

AT CONTRACTOR'S OPTION, MASONRY LINTELS ARE ALSO ACCEPTABLE FOR MISCELLANEOUS OPENINGS:
- 8"W (or 12"w) x 8"H REINF. W/ 2-#5 FOR SPANS UP TO 3'-4" S
- 8"W (or 12"w) x 8"H REINF. W/ 2-#6 FOR SPANS UP TO 5'-4"
- 8"W (or 12"w) x 16"H REINF. W/ 2-#6 FOR SPANS UP TO 6'-8" MAX.

COORDINATE REQUIREMENTS FOR LOOSE LINTELS WITH ARCHITECTURAL, MECHANICAL AND ELECTRICAL DRAWINGS.

17. ALL DOUBLE ANGLE LINTELS SHALL BE WELDED BACK TO BACK WITH A MINIMUM 2 INCH STITCH WELD EVERY 8 INCHES.

STRUCTURAL STEEL
1. THE STRUCTURAL STEEL PORTIONS OF THIS STRUCTURE ARE DESIGNED ACCORDING TO THE ALLOWABLE STRESS DESIGN PROVISIONS OF THE 9TH EDITION OF THE AISC MANUAL OF STEEL CONSTRUCTION, THE LOAD AND RESISTANCE FACTOR DESIGN PROVISIONS OF THE 2ND EDITION AISC MANUAL OF STEEL CONSTRUCTION INCLUDING SECTIONS 2204 AND 2212 OF CHAPTER 22 IN THE MICHIGAN BUILDING CODE. STEEL COMPONENTS HAVE BEEN DESIGNED ACCORDING TO THE PROVISIONS FOR SEISMIC DESIGN CATEGORY B.

2. STEEL DETAILING, FABRICATION AND ERECTION SHALL BE IN ACCORDANCE WITH THE LATEST AISC SPECIFICATIONS FOR "STRUCTURAL STEEL BUILDINGS".

3. ALL STRUCTURAL STEEL SHALL CONFORM TO THE LATEST ASTM SPECIFICATIONS ACCORDING TO THE FOLLOWING SERIAL DESIGNATIONS BY SHAPE:
WIDE FLANGES: A992 OR ASTM A572, Fy=50 KSI
ANGLES, TEES, BARS AND PLATES: A36
SQUARE OR RECTANGULAR HOLLOW STRUCTURAL SHAPES OR TUBES: ASTM A500, GR. B, Fy=46 KSI
ROUND HOLLOW STRUCTURAL SHAPES OR PIPES: ASTM A53; GRADE B, Fy=35 KSI

4. ALL WELDED CONNECTIONS SHALL CONFORM TO THE LATEST AWS CODE, USING E70XX ELECTRODES, WITH WELDING PERFORMED BY QUALIFIED WELDERS.

5. BOLTED CONNECTIONS SHALL BE MADE WITH A325-N OR A490-N BOLTS. LOCATIONS OF SLIP CRITICAL CONNECTIONS SHALL BE AS NOTED ON THE DRAWINGS, IF REQUIRED. ALL BOLTS ARE TO BE INSTALLED IN ACCORDANCE WITH THE LATEST AISC SPECIFICATIONS FOR "STRUCTURAL JOINTS USING ASTM A325 OR A490 BOLTS".

6. THE DESIGN, CONFIGURATION, ERECTION SAFETY AND SEQUENCING OF ALL STRUCTURAL STEEL CONNECTIONS SHALL BE THE RESPONSIBILITY OF THE STRUCTURAL STEEL FABRICATOR. REVIEW AND ACCEPTANCE OF THE SHOP DRAWINGS BY THE ENGINEER SHALL CONSTITUTE APPROVAL OF THE LOAD CARRYING ADEQUACY ONLY.

7. CONNECTIONS SHALL BE DESIGNED FOR ONE-HALF THE TOTAL ALLOWABLE UNIFORM LOAD (MIN.) PER AISC BEAM LOAD TABLES, UNLESS NOTED OTHERWISE.

8. TEMPORARY ERECTION SEATS SHALL BE PROVIDED AS RECOMMENDED ON PAGE 3-59 OF THE LATEST EDITION AISC PUBLICATION "ENGINEERING FOR STEEL CONSTRUCTION".

9. THE DESIGN OF STEEL FRAMED STAIRS SHALL BE THE RESPONSIBILITY OF THE STEEL FABRICATOR. PROVIDE COMPLETE ENGINEERED STAIR ASSEMBLIES, CONFORMING TO THE ARCHITECTURAL INTENT, UNDER THE SEAL OF AN ENGINEER REGISTERED IN THE STATE OF MICHIGAN, INCLUDING METAL FRAMING, HANGERS, MASONRY BEARING PLATES, COLUMNS, RAILING ASSEMBLIES, AND OTHER COMPONENTS NECESSARY TO SUPPORT THE STAIRS AND LANDINGS INCLUDING ANCHORAGE TO THE SUPPORTING STRUCTURE.

10. DRILLED-IN ANCHORS SHALL BE EITHER "EXPANSION" OR "ADHESIVE" AS INDICATED ON THE DRAWINGS. INSTALLATION OF DRILLED-IN ANCHORS SHALL BE IN COMPLIANCE WITH MANUFACTURER'S LITERATURE AND GUIDELINES. EXPANSION BOLTS SHALL BE "HILTI KWIK BOLT II" OR APPROVED EQUAL. ADHESIVE SHALL BE "HILTI HVA" OR APPROVED EQUAL.

11. REFER TO ARCHITECTURAL DRAWINGS FOR ADDITIONAL ANGLES, PLATES, BARS, CLIPS, ETC., ATTACHED TO STRUCTURAL STEEL. VERIFY EXACT SIZE AND LOCATION OF ALL ROOF OPENINGS WITH CONTRACTOR INVOLVED. IN ADDITION TO L5x3 1/2x5/16 (L.L.V.) PERIMETER CURB SUPPORT FRAMES, PROVIDE L3x3x1/4 FRAMES AT OPENINGS UNDER MECHANICAL UNITS TO SUPPORT METAL DECK. FAILURE TO CONSULT ALL DRAWINGS FOR REQUIRED STEEL SHALL NOT CONSTITUTE A BASIS FOR EXTRAS.

12. THIS STEEL FRAME IS NON SELF-SUPPORTING PER AISC "CODE OF STANDARD PRACTICE", SECTIONS 7.9.3. AND 7.9.5.; ERECTION, BRACING, SHORING, ETC. SHALL CONFORM TO THESE SECTIONS. IT IS THE CONTRACTOR'S SOLE RESPONSIBILITY TO DETERMINE ERECTION SEQUENCE AND PROCEDURE.

STEEL JOISTS
1. STEEL JOISTS ARE TO BE FABRICATED BY A MEMBER OF THE STEEL JOIST INSTITUTE AND BE DESIGNED, FABRICATED AND ERECTED IN ACCORDANCE WITH THE LATEST SJI SPECIFICATIONS AND RECOMMENDATIONS. JOISTS SHALL BE DESIGNED FOR A MINIMUM NET UPLIFT OF 10 PSF. UPLIFT BRIDGING SHALL BE PROVIDED AS REQUIRED.

2. ALL PROVISIONS OF THE "RECOMMENDED CODE OF STANDARD PRACTICE FOR STEEL JOISTS AND JOIST GIRDERS" AS ADOPTED BY THE SJI SHALL BE ADHERED TO.

3. STEEL JOISTS BEARING ON STEEL BEAMS OR PLATES, ARE TO BE CONNECTED WITH MIN. 2" LONG, 3/16" FILLET WELD EACH SIDE OF BEARING. EXTEND BOTTOM CHORDS OF JOISTS AT COLUMNS TO A STABILIZER PLATE. DO NOT CONNECT UNLESS NOTED OTHERWISE. IF NO JOIST OCCURS DIRECTLY AT A COLUMN, EXTEND BOTTOM CHORDS OF EACH ADJACENT JOIST TO A STABILIZER PLATE.

METAL DECK AND FORM
1. METAL DECK AND FORM SHALL CONFORM TO ALL PROVISIONS OF THE "CODE OF RECOMMENDED STANDARD PRACTICE FOR COMPOSITE DECK, FORM DECK, AND ROOF DECK CONSTRUCTION" AS ADOPTED BY THE STEEL DECK INSTITUTE.

2. METAL DECK AND FORM SHALL BE PROVIDED WITH NESTING SIDE SEAMS OF DEPTH AND GAGE AS INDICATED ON THE DRAWINGS. METAL ROOF DECK SHALL BE WIDE RIB TYPE "B". PROVIDE DECK MANUFACTURER'S STANDARD ROOF SUMP PANS FOR EACH ROOF SUMP LOCATION.

3. METAL DECK AND FORM IS DESIGNED TO ACT AS A DIAPHRAGM AND IS INTENDED TO BRACE THE BUILDING. EXTREME CARE SHALL BE UTILIZED TO INSTALL DECK AND FORM CONNECTIONS.

4. CONNECTIONS:

1 1/2" METAL ROOF DECK: CONNECT TO ALL SUPPORTING STEEL WITH 36/7 WELDING PATTERN WHERE INDICATED ON THE ROOF FRAMING PLAN, WITH PUDDLE WELDS (MIN. 5/8" DIAMETER) AT 6" O.C. MAXIMUM SPACING (MIN. 7 PER SHEET: 6-6-6-6-6-6 PATTERN) AT ALL SUPPORT POINTS. SIDE LAP CONNECTIONS SHALL BE MADE AT DECK SUPPORT, AT MIDPOINT AND QUARTER POINTS OF DECK SPAN (3 CONNECTIONS PER SPAN) WITH #10 TEK SCREWS. REFER TO SPECIFICATIONS FOR ADDITIONAL ERECTION PROCEDURES.

PRECAST CONCRETE FRAMING PRODUCTS
1. HOLLOW CORE UNITS SHALL BE DESIGNED BY THE PRECAST CONCRETE PRODUCT SUPPLIER. SHOP DRAWINGS AND CALCULATIONS SHALL BE PREPARED BY AND SUBMITTED BEARING THE SEAL OF A PROFESSIONAL ENGINEER REGISTERED IN THE STATE OF MICHIGAN. AS A MINIMUM, THE LOADING GIVEN BELOW SHALL BE USED. ADDITIONAL LOADING OR LOAD COMBINATIONS IF REQUIRED BY CODE SHALL BE DETERMINED AND IMPLEMENTED BY THE PRECAST CONCRETE DESIGNER.

2. THE PRECAST CONCRETE PRODUCT SUPPLIER SHALL BE A MEMBER OF THE PRESTRESSED CONCRETE INSTITUTE (PCI). THE DESIGN AND MANUFACTURE OF ALL PRECAST CONCRETE PRODUCTS SHALL CONFORM TO ALL PROVISIONS OF THE "PCI DESIGN HANDBOOK" AND TO THE LATEST ACI STANDARDS AND GUIDELINES.

3. THE PRECAST CONCRETE SUPPLIER SHALL COORDINATE THE SIZE, LOAD AND LOCATION OF ALL MECHANICAL UNITS WITH THE GENERAL AND MECHANICAL CONTRACTORS.

GENERAL NOTES

GENERAL CONDITIONS
1. IF ANY GENERAL NOTE CONFLICTS WITH ANY DETAIL OR NOTE ON THE PLANS OR IN THE SPECIFICATIONS, THE STRICTEST PROVISION SHALL GOVERN.

2. THE STRUCTURAL DRAWINGS ARE FOR THE PLACEMENT AND SIZE OF STRUCTURAL COMPONENTS ONLY. REQUIREMENTS MADE BY OSHA, DNR, AND ALL APPLICABLE SAFETY CODES ARE TO BE DETERMINED AND PROVIDED BY THE CONTRACTOR.

3. THE STRUCTURE IS DESIGNED TO BE SELF-SUPPORTING AND STABLE AFTER IT IS FULLY COMPLETED ACCORDING TO THE PLANS AND SPECIFICATIONS. IT IS THE CONTRACTOR'S SOLE RESPONSIBILITY TO DETERMINE CONSTRUCTION/ERECTION PROCEDURE AND SEQUENCE, AND TO ENSURE THE SAFETY OF THE STRUCTURE AND ITS COMPONENT PARTS DURING CONSTRUCTION. THIS INCLUDES PROVIDING TEMPORARY BRACING, SHORING, GUYS OR TIE-DOWNS. THESE TEMPORARY SUPPORTS SHALL REMAIN IN PLACE UNTIL ALL STRUCTURAL COMPONENTS ARE IN PLACE AND COMPLETED AS THE STRUCTURAL MEMBERS OR SYSTEMS ARE NOT SELF-BRACING UNTIL PERMANENTLY CONNECTED TO THE STRUCTURE.

4. THE ARCHITECT AND STRUCTURAL ENGINEER ASSUME NO LIABILITY FOR THE STRUCTURE DURING CONSTRUCTION. AS SUCH, THE MEANS AND METHODS OF CONSTRUCTION ARE THE SOLE RESPONSIBILITY OF THE CONTRACTOR(S).

5. USE OF ENGINEERING DRAWINGS AS ERECTION DRAWINGS BY THE CONTRACTOR IS EXPRESSLY PROHIBITED.

REQUIRED INSPECTIONS
COORDINATE CONSTRUCTION SCHEDULE WITH OWNER'S QUALITY INSPECTOR WITH ADEQUATE NOTICE PROVIDED IN ORDER TO ALLOW THE FOLLOWING INSPECTIONS. SEE PROJECT MANUAL AND REFERENCED CODES FOR SPECIFIC INSPECTION AND TESTING REQUIREMENTS.

- SOIL BEARING CAPACITY
- SUB-GRADE PREPARATION AND FILL COMPACTION
- CONCRETE
- MASONRY
- WELDING AND HIGH STRENGTH BOLTING
- ROOF AND FLOOR DIAPHRAGM (METAL DECK) CONNECTIONS

FOUNDATIONS
1. FOOTINGS SHALL BEAR ON FIRM, UNDISTURBED SOIL WITH AN ASSUMED SAFE BEARING CAPACITY OF 3500 PSF, IN ACCORDANCE WITH THE PROJECT SOILS REPORT NO. S-6706, PREPARED BY TESTING ENGINEERS & CONSULTANTS, INC. (DATED 12-05-2002). IF SOIL OF THIS CAPACITY IS NOT FOUND AT THE ELEVATIONS INDICATED, FOOTINGS SHALL BE ENLARGED OR LOWERED AT THE DIRECTION OF THE ARCHITECT. ALLOWABLE SOIL BEARING PRESSURE SHALL BE CONFIRMED IN THE FIELD BY A QUALIFIED SOILS ENGINEER.

2. UNLESS OTHERWISE NOTED OR DETAILED, ALL FOUNDATIONS SHALL BE LOCATED SUCH THAT THE CENTERLINE OF FOOTING IS ALSO THE CENTERLINE OF COLUMN.

3. EXISTING UNSUITABLE FILL SOILS SHALL BE REMOVED COMPLETLY FROM WITHIN THE BUILDING FOOTPRINT AND REPLACED WITH ENGINEERED FILL IN COMPLIANCE WITH PROJECT SOILS REPORT.

4. PREPARATION OF THE SITE, BUILDING FOOTPRINT AND SLAB SUB-BASE SHALL PROCEED IN COMPLIANCE WITH LOCAL CODES AND THE PROJECT SOILS REPORT IDENTIFIED ABOVE. UNLESS OTHERWISE NOTED OR SPECIFIED, ALL FILL UNDER FLOOR SLABS AND BEHIND FOUNDATION WALLS SHALL BE COMPACTED WITH VIBRATORS, COMPACTORS, ETC. TO 95% MAXIMUM DENSITY (MODIFIED PROCTOR) AT OPTIMUM MOISTURE CONTENT. ONLY SMALL, HAND OPERATED COMPACTION EQUIPMENT SHALL BE ALLOWED WITHIN 8 FEET OF BASEMENT WALLS.

5. PROVIDE NECESSARY SHEETING, SHORING, FORMING OR BRACING, ETC., DURING EXCAVATION AS REQUIRED TO PROTECT SIDES OF EXCAVATIONS OR AS REQUIRED TO COMPLY WITH SAFETY REGULATIONS.

6. THIS TRADE SHALL PROVIDE PUMPS, WELL POINTS, OR OTHER SYSTEMS AS REQUIRED BY THE CONDITIONS IDENTIFIED IN THE PROJECT SOILS REPORT. PUMPS SHALL BE OPERATED AS REQUIRED TO ACCOMPLISH THE ABOVE, ON A 24-HOUR BASIS, IF NECESSARY. UNDER NO CONDITION SHALL WATER BE ALLOWED TO WASH OVER FRESHLY PLACED CONCRETE.

7. ALL BOTTOM OF FOOTING TRANSITIONS SHALL BE MADE USING STEPS AS SHOWN IN TYPICAL DETAIL 4/S2.01. WHERE NEW FOOTINGS ABUT EXISTING FOUNDATIONS, CAREFULLY HAND EXCAVATE AND PLACE BOTTOM OF NEW FOOTING AT THE SAME ELEVATION AS THE EXISTING.

CONCRETE
1. THE CONCRETE PORTIONS OF THIS STRUCTURE ARE DESIGNED ACCORDING TO THE LATEST ULTIMATE STRENGTH DESIGN PROVISIONS OF THE AMERICAN CONCRETE INSTITUTE BUILDING CODE REQUIREMENTS FOR STRUCTURAL CONCRETE AND COMMENTARY (ACI 318) INCLUDING SECTIONS 1902 THRU 1907 OF CHAPTER 19 IN THE MICHIGAN BUILDING CODE. CONCRETE COMPONENTS HAVE BEEN DESIGNED ACCORDING TO THE PROVISIONS FOR SEISMIC DESIGN CATEGORY B.

2. ALL CONCRETE SHALL BE NORMAL WEIGHT (150 PCF) EXCEPT SUPPORTED SLABS SHALL BE LIGHT WEIGHT (110 PCF). MINIMUM CONCRETE STRENGTH SHALL BE f'c=3000 PSI MIN. AT 28 DAYS, UNLESS NOTED OTHERWISE; SUPPORTED SLABS AND SLABS ON GRADE SHALL BE f'c=3500 PSI MIN. UNLESS NOTED OTHERWISE. PROVIDE f'c=4000 PSI WITH 6% +/- 1% ENTRAINED AIR WHERE CONCRETE IS EXPOSED TO EXTERIOR ATMOSPHERE OR WEATHER.

3. ALL CONCRETE SHALL BE PORTLAND CEMENT CONFORMING TO ASTM C150. AGGREGATE SHALL CONFORM TO ASTM C33.

4. CONCRETE ADMIXTURES SHALL BE USED TO FACILITATE CONCRETE PLACEMENT, AID DIFFICULT PLACING CONDITIONS OR ASSIST IN ATTAINING SPECIFIED CONCRETE QUALITIES. ADMIXTURES SHALL HAVE LESS THAN 0.05 PERCENT CHLORIDE IONS.

AIR ENTRAINMENT PER ASTM C260
WATER REDUCER PER ASTM C494, TYPE A
WATER REDUCER/ACCELERATOR PER ASTM C494, TYPE C OR E
WATER REDUCER/RETARDER PER ASTM C494, TYPE B OR TYPE D
SUPERPLASTICIZER PER ASTM C494, TYPE F OR G

5. CONCRETE MIXES SHALL BE PROPORTIONED PER SECTION 3.9 OF ACI-301. CERTIFIED HISTORICAL TEST DATA SHALL SERVE AS A BASIS FOR EACH MIX DESIGN. DEVIATIONS SHALL BE SUBSTANTIATED WITH ADDITIONAL CERTIFIED TRIAL MIX TESTING AND RESULTS. SUBMIT MIX DESIGN, HISTORICAL TEST DATA OR TRIAL MIX RESULTS FOR APPROVAL PRIOR TO PROCEEDING WITH THE WORK. WHERE HISTORICAL TEST DATA IS NON-EXISTENT THE FOLLOWING GUIDELINES SHALL APPLY:

TYPE	COMPRESSIVE STRENGTH, f'c (28 DAY, PSI)	CEMENT CONTENT (LBS./C.Y.)	WATER/CEMENT RATIO (BY WEIGHT)	SLUMP
STANDARD, NORMAL WT.	3000 MIN.	470 MIN.	0.52 MAX.	4" MAX.
STANDARD, NORMAL WT.	3500 MIN.	517 MIN.	0.50 MAX.	4" MAX.
AIR ENTRAINED, NORM. WT.	4000 MIN.	564 MIN.	0.40 MAX.	4" MAX.

6. ALL CONCRETE WORK AND PLACEMENT SHALL CONFORM TO THE LATEST ACI STANDARDS AND RECOMMENDATIONS. FREE FALL SHALL NOT EXCEED 10 FEET FOR ALL CONCRETE CONTAINING HIGH-RANGE WATER REDUCER (SUPERPLASTICIZER) AND 5 FEET FOR ALL OTHER CONCRETE. PROVIDE ELEPHANT TRUNK, TREMIES OR OTHER PLACING EQUIPMENT OR OPENINGS IN SIDES OF FORMS AS REQUIRED TO LIMIT FREE FALL.

7. ALL REINFORCING BARS, DOWELS AND TIES SHALL CONFORM TO ASTM A615, GRADE 60. ALL REINFORCING STEEL SHALL BE CONTINUOUS AND SHALL HAVE 36 BAR DIAMETER LAP (MIN.) AND SHALL BE FABRICATED AND PLACED IN ACCORDANCE WITH ACI 315 AND ACI 318, LATEST EDITION.

8. ALL WELDED WIRE FABRIC SHALL CONFORM TO ASTM A185 FURNISHED IN FLAT MATS OR SHEETS, NOT IN ROLLS. PROVIDE MINIMUM 8" LAP BETWEEN SHEETS. ALL SLAB REINFORCING SHALL BE SUPPORTED ON SAND CHAIRS.

9. ALL WALL DOWELS SHALL BE 48 DIAMETERS LONG USING THE SAME SIZE AND QUANTITY AS THE VERTICAL WALL BARS. PROVIDE HOOKS AS REQUIRED FOR PLACEMENT.

10. REINFORCED CONCRETE WALL FOOTINGS SHALL HAVE CORNER BARS AT EACH INTERSECTION OF THE SAME SIZE AND SPACING AS THE MAIN HORIZONTAL REINFORCING. LAPS SHALL BE MINIMUM 30 BAR DIAMETERS.

11. ALL EXPOSED CONCRETE CORNERS AND EDGES SHALL BE CHAMFERED 3/4".

MASONRY
1. THE MASONRY PORTIONS OF THIS STRUCTURE ARE DESIGNED ACCORDING TO THE LATEST WORKING STRESS DESIGN PROVISIONS OF THE MASONRY STANDARDS JOINT COMMITTEE (MSJC) BUILDING CODE REQUIREMENTS FOR MASONRY STRUCTURES (ACI 530/ASCE 5/TMS 402) AND SPECIFICATIONS FOR MASONRY STRUCTURES (ACI 530.1/ASCE 6/TMS 602) INCLUDING SECTIONS 2106 AND 2107 OF CHAPTER 21 IN THE MICHIGAN BUILDING CODE. MASONRY COMPONENTS HAVE BEEN DESIGNED ACCORDING TO THE PROVISIONS FOR SEISMIC DESIGN CATEGORY B.

2. ALL STRUCTURAL MASONRY IS TO BE CONSTRUCTED IN ACCORDANCE WITH THE LATEST MASONRY STANDARDS JOINT COMMITTEE (MSJC) BUILDING CODE REQUIREMENTS FOR MASONRY STRUCTURES (ACI 530/ASCE 5/TMS 402) AND SPECIFICATIONS FOR MASONRY STRUCTURES (ACI 530.1/ASCE 6/TMS 602). MASONRY SUBMITTALS ARE REQUIRED BY ACI 530.1/ASCE 6/TMS 602 SECTION 1.5. MASONRY TESTING AND INSPECTIONS ARE REQUIRED BY ACI 530.1/ASCE 6/TMS 602 SECTION 1.6, TABLE 5, LEVEL 2 QUALITY ASSURANCE.

3. ALL STRUCTURAL MASONRY HAS BEEN ENGINEERED IN ACCORDANCE WITH CHAPTER 2, ALLOWABLE STRENGTH DESIGN. COMPRESSION STRENGTH SHALL BE DETERMINED ACCORDING TO THE UNIT STRENGTH METHOD FOR CONCRETE MASONRY MSJC SECTION 1.4.B.2.b; AND MSJC SECTION 1.4.B.2.c FOR CLAY UNITS.

4. ALL CONCRETE BLOCK SHALL CONFORM TO ASTM C 90 AND C 140, TYPE I, GRADE N. ALL CLAY UNITS SHALL CONFORM TO ASTM C67 AND C652.

5. MORTAR SHALL CONFORM TO ASTM C 270, AS FOLLOWS:
In contact with earth - Type M or S — Type M or S = 1900 psi
Reinforced - Type S — Type n = 2150 psi
Not in contact with earth - Type N, M or s

6. GROUT SHALL CONFORM TO ASTM C 476, WITH PEA GRAVEL AGGREGATE AND A MINIMUM STRENGTH OF 2000 PSI.

7. MINIMUM MASONRY COMPRESSIVE STRENGTH SHALL BE f'm = 1500 PSI.

8. ALL STRUCTURAL MASONRY SHALL COURSE IN STANDARD RUNNING BOND. UNLESS NOTED OTHERWISE, ALL INTERSECTING BEARING WALLS, SHEAR WALLS OR OTHER STRUCTURAL WALLS SHALL BE LAID UP IN INTERLOCKED, BONDED COURSING. MECHANICAL ANCHORS OR WALL TIES MAY BE SUBSTITUTED WITH PRIOR APPROVAL BY THE ENGINEER.

9. PROVIDE HORIZONTAL WIRE TYPE REINFORCING WITH 9 GAUGE SIDE RODS AND 9 GAUGE CROSS RODS IN EVERY SECOND COURSE (16" O.C.), IN ALL MASONRY WALLS. SPACE AT 8" O.C. AT PARAPET WALLS. PROVIDE "LADDER" TYPE REINFORCING ONLY IN WALLS WITH VERTICAL REINFORCING. PROVIDE ADJUSTABLE TIES AT ALL LINTELS AND CAVITY WALLS AT 16" O.C. MAXIMUM SPACING.

10. PROVIDE 1-#5 VERTICAL BAR EACH SIDE OF EACH CONTROL JOINT; SEE PLANS FOR ADDITIONAL REINFORCING AT CORNERS, OPENINGS, ETC.

11. ALL REINFORCING BARS, DOWELS AND TIES SHALL CONFORM TO ASTM A615, GRADE 60. VERTICAL REINFORCING BARS SHALL BE HELD IN PLACE BY POSITIONERS SPACED NOT FURTHER THAN RECOMMENDED BY CODE.

12. PROVIDE A CONTINUOUS BOND BEAM, WITH 2-#5'S, AT THE TOP OF WALLS PARALLEL WITH ROOF/FLOOR FRAMING. STEP BOND BEAMS ELEVATIONS AS REQUIRED, LAP MINIMUM 32".

13. PERFORM GROUTING ACCORDING TO THE FOLLOWING:
- ALL MASONRY BELOW GRADE SHALL BE GROUTED SOLID.
- ALL CORES WITH VERTICAL REINFORCING OR TO RECEIVE DRILLED-IN ANCHORS SHALL BE GROUTED SOLID.
- MAXIMUM 4'-0" HIGH LIFTS.

MATERIAL LEGEND

IMAGE	DESCRIPTION
	PLAN VIEW
	RECESSED FLOOR SLAB #1
	RECESSED FLOOR SLAB #2
	RECESSED FLOOR SLAB #3
	RECESSED FLOOR SLAB #4
	ACOUSTICAL ROOF DECK
	SECTION VIEW
	CONCRETE MASONRY
	CONCRETE MASONRY-GROUT SOLID
	SUB-BASE
	CONCRETE
	EARTH
	EXISTING EARTH
	GROUT
	EXISTING MASONRY
	EXISTING CONCRETE
	STEEL
	EXISTING CONCRETE
	EXTERIOR PAVING

SYMBOL LEGEND

IMAGE	DESCRIPTION
	NORTH INDICATOR
? S7	SECTION AND DETAIL NUMBER
? S7	SECTION CUT IDENTIFICATION
? S7	FRAMING ELEVATION INDICATOR (NOT TO SCALE)
? S7	PLAN DETAIL IDENTIFICATION
FN	FOUNDATION KEYNOTE INDICATOR
FT	FLOOR FRAMING KEYNOTE INDICATOR
RN	ROOF KEYNOTE INDICATOR
SB	SOIL BORING IDENTIFICATION AND LOCATION
TB	TEST BORING IDENTIFICATION AND LOCATION
T.O. ELEV.=	ELEVATION INDICATOR
COL.	NEW COLUMN GRID DESIGNATION
COL.	EXISTING COLUMN GRID DESIGNATION
P_	COLUMN PIER IDENTIFICATION
MP_	MASONRY PIER IDENTIFICATION
F_	COLUMN FOOTING IDENTIFICATION
WF_	WALL FOOTING IDENTIFICATION
	COLUMN IDENTIFICATION
	POST IDENTIFICATION
	HANGER IDENTIFICATION
	STEP BOTTOM OF FOOTING
	STEP TOP OF FOOTING
	UTILITY SLEEVE
	FORMED CONCRETE WALL
	BEARING PLATE IDENTIFICATION
L_	LINTEL IDENTIFICATION
ML_	MASONRY LINTEL IDENTIFICATION
	MOMENT CONNECTION
	POINT LOAD
	BEAM SHEAR SPLICE
000'-0"	BOTTOM OF EXISTING FOOTING ELEVATION
	SLAB SPAN
	REVISION CLOUD
	EXPANSION ANCHOR
	ADHESIVE ANCHOR
	VERTICAL BRACE
	WELDED WIRE FABRIC
	REINFORCING

ABBREVIATIONS

ACI = AMERICAN CONCRETE INSTITUTE
ACSS = ARCHITECTURALLY EXPOSED STRUCTURAL STEEL
AISC = AMERICAN INSTITUTE OF STEEL CONSTRUCTION
ARCH. = ARCHITECT OR ARCHITECTURAL
ASCE = AMERICAN SOCIETY OF CIVIL ENGINEERS
ASTM = AMERICAN STANDARDS FOR TESTING AND MATERIALS
AWS = AMERICAN WELDING SOCIETY
BM. = BEAM
B.O. = BOTTOM OF
BRG. = BEARING
CL. = CENTERLINE
DN. = DOWN
DNR = DEPARTMENT OF NATURAL RESOURCES
DWGS. = DRAWINGS
E.F. = EACH FACE
ELECT. = ELECTRICAL
ELEV. = ELEVATION
E.W. = EACH WAY
EX., EXIST. = EXISTING
EXP. = EXPANSION
H. = HIGH
HORIZ. = HORIZONTAL
KIPS = KILOPOUNDS
L.L.V. = LONG LEG VERTICAL
L.L.H. = LONG LEG HORIZONTAL
LO = LOW
MAS. = MASONRY
MAX. = MAXIMUM
MBC = 2000 MICHIGAN BUILDING CODE
MECH. = MECHANICAL
MIN. = MINIMUM
MPH = MILES PER HOUR
NCMA = NATIONAL CONCRETE MASONRY ASSOCIATION
O.C. = ON CENTER
OSHA = OCCUPATION SAFETY AND HEALTH ADMINISTRATION
P.E.M.B. = PRE-ENGINEERED METAL BUILDING
PL PLS = PLATE(S)
PSI = POUNDS PER SQUARE INCH
PSF = POUNDS PER SQUARE FOOT
SDI = STEEL DECK INSTITUTE
SIM. = SIMILAR
SJI = STEEL JOIST INSTITUTE
STRUCT. = STRUCTURAL
T.O. = TOP OF
TYP. = TYPICAL (SITUATION OCCURS REPEATEDLY)
U.N.O. = UNLESS NOTED OTHERWISE
V., VERT. = VERTICAL
V.I.F. = VERIFY IN FIELD

SHEET INDEX

NO.	SHEET NAME	BIDS 05/28/04	FOUNDATIONS 05/21/04
S001	COVER SHEET AND GENERAL NOTES	●	●
S002	TYPICAL DETAILS	●	●
S100	FOUNDATION PLAN	●	●
S100a	FLOOR SLAB JOINT PLAN	●	●
S101	FOUNDATION DETAILS	●	●
S200	SECOND FLOOR FRAMING PLAN	●	
S300	THIRD FLOOR FRAMING PLAN	●	
S400	FOURTH FLOOR AND LOW ROOF FRAMING PLAN	●	
S500	HIGH ROOF FRAMING PLAN	●	
S600	SECTIONS AND DETAILS	●	
S601	SECTIONS AND DETAILS	●	

ISSUED FOR: METRO LOFTS, ROYAL OAK, MICHIGAN, 23091, P.Y.I. No.=04-0707.00

STRUCTURAL CODE DATA

DESIGN CRITERIA PER 2000 MICHIGAN BUILDING CODE
FLOOR LIVE LOADS:
LOBBIES, STAIRS AND 1ST FLOOR CORRIDORS = 100 PSF
CORRIDORS (ABOVE 1ST FLOOR) = 80 PSF
PRIVATE ROOMS = 40 PSF
TERRACES = 100 PSF
STORAGE AREAS = 125 PSF
BALCONIES = 60 PSF
(A ≤ 100 SQ. FT.)
BALCONIES = 100 PSF
(A > 100 SQ. FT.)
ROOF LIVE LOAD:
MINIMUM = 25 PSF
ROOF SNOW LOAD:
GROUND SNOW LOAD Pg = 25 PSF
EXPOSURE = B
IMPORTANCE FACTOR Is = 1.0, CATEGORY I
EXPOSURE FACTOR Ce = 1.00
THERMAL FACTOR Ct = 1.00
FLAT-ROOF SNOW LOAD Pf = 20 PSF
WIND LOAD:
BASIC WIND SPEED = 90 MPH
WIND IMPORTANCE FACTOR Iw = 1.0, CATEGORY I
WIND EXPOSURE = B
INTERNAL PRESSURE COEFFICIENT = +/-0.18
MAX. COMPONENTS AND CLADDING PRESSURE = 26 PSF
EARTHQUAKE DESIGN DATA:
SEISMIC USE GROUP = I, CATEGORY I
SEISMIC IMPORTANCE FACTOR Ie= 1.0
SEISMIC DESIGN CATEGORY = B
SPECTRAL RESPONSE COEFFICIENTS: Sds = 0.13g
Sd1 = 0.07g
SITE CLASS = D
BASIC SEISMIC FORCE RESISTING SYSTEM:
ORDINARY REINFORCED MASONRY SHEAR WALLS
ANALYSIS PROCEDURE = EQUIVALENT LATERAL FORCE

NEUMANN SMITH & ASSOCIATES
Architecture
Planning
Interior Design
400 Galleria Officentre
Suite 555
Southfield, Michigan 48034
248-352-8310
FAX 248-352-1821
NS@neumannsmith.com

Metro Lofts
Royal Oak, Michigan

PENHALE & YATES, INC.
CONSULTING STRUCTURAL ENGINEERS
29200 SOUTHFIELD ROAD, SUITE 207
SOUTHFIELD MICHIGAN 48076
PH 248 569 4446 FAX 248 569 5155

Revisions

6-1-2004

MAY 28, 2004 - ISSUED FOR BIDS
MAY 21, 2004 - ISSUED FOR FOUNDATIONS

Date: 5-21-2004
Drawn: pm
Checked: pyl
Approved: pyl
Bidpak Number

☐ Preliminary
■ Construction
☐ Record

Do not scale
Use figured dimensions only
Copyright © 2003

Job Number: 23091
Title: **Cover Sheet and General Notes**

Scale: 1/8" = 1'-0"

Sheet: **S001**

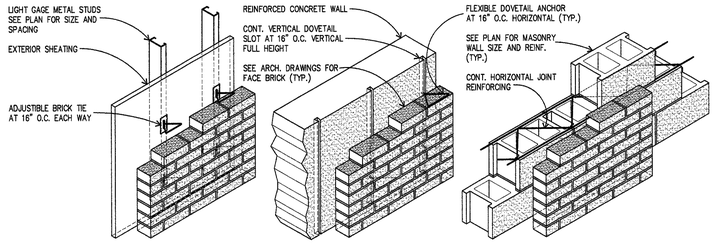

15 S002 TYPICAL BRICK VENEER ANCHOR DETAILS

SCALE: NONE

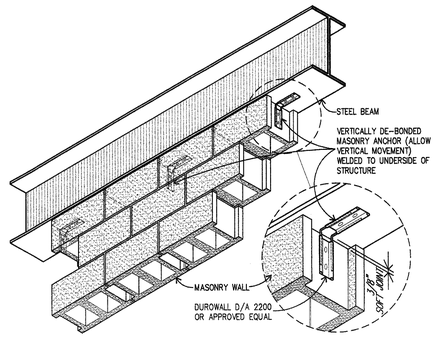

14 S002 VERTICALLY DEBONDED MASONRY ANCHOR DETAIL

SCALE: NONE

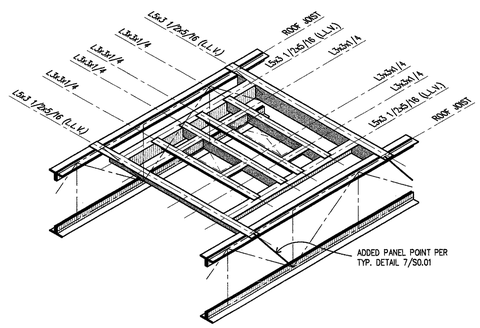

13 S002 TYPICAL FRAMED ROOF OPENING DETAIL

SCALE: 1/2" = 1'-0"

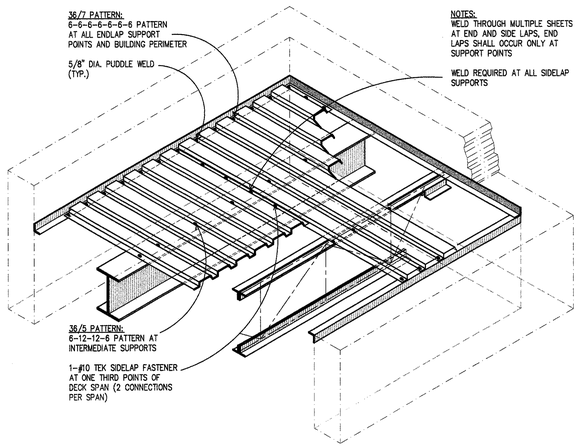

12 S002 TYPICAL ROOF DECK WELDING PATTERN DETAIL

SCALE: 1/2" = 1'-0"

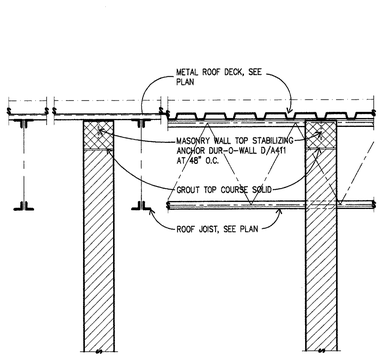

11 S002 TYPICAL FULL HEIGHT MASONRY PARTITION SECTION

SCALE: 3/4" = 1'-0"

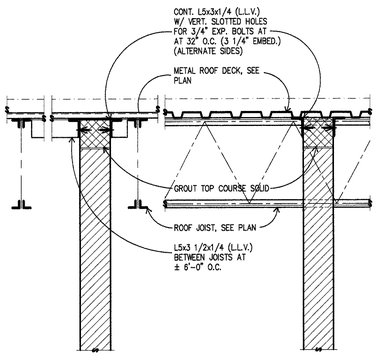

10 S002 TYPICAL FULL HEIGHT MASONRY PARTITION SECTION

SCALE: 3/4" = 1'-0"

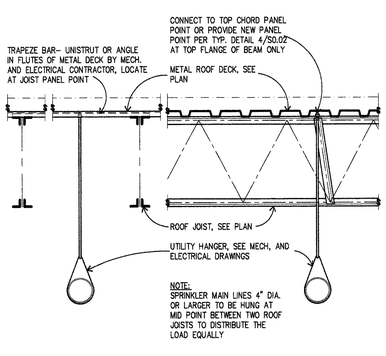

9 S002 MECHANICAL/ELECTRICAL PIPE HANGER SUPPORT DETAIL

SCALE: 3/4" = 1'-0"

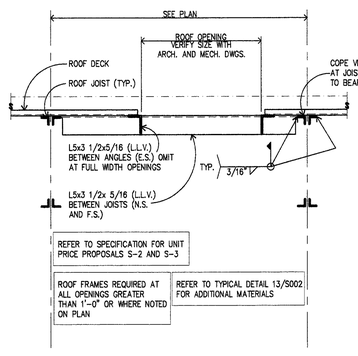

8 S002 TYPICAL FRAMED ROOF OPENING DETAIL

SCALE: 3/4" = 1'-0"

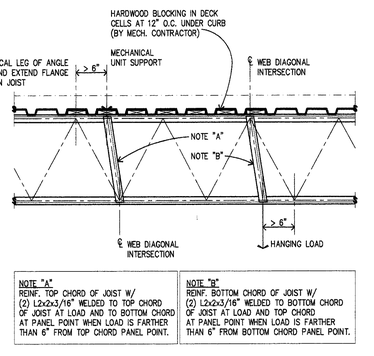

7 S002 TYPICAL JOIST PANEL POINT REINFORCING DETAIL

SCALE: 3/4" = 1'-0"

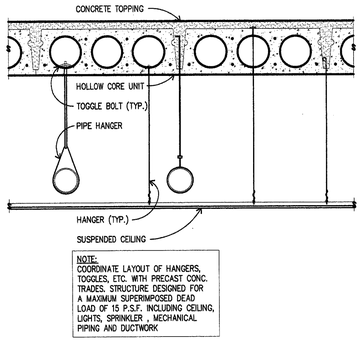

6 S002 MECHANICAL/ELECTRICAL AND CEILING SUPPORT DETAIL

SCALE: 3/4" = 1'-0"

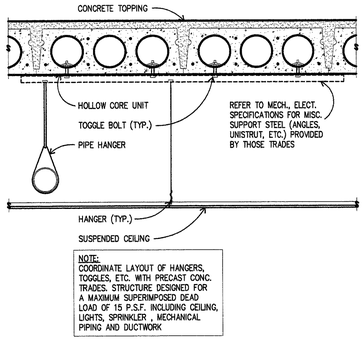

5 S002 MECHANICAL/ELECTRICAL AND CEILING SUPPORT DETAIL

SCALE: 3/4" = 1'-0"

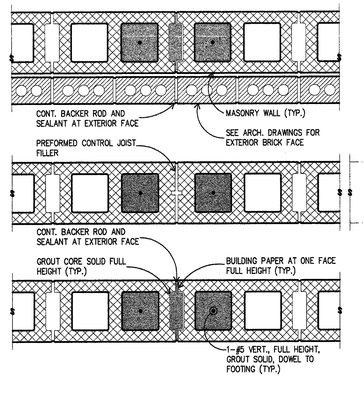

4 S002 TYPICAL MASONRY WALL CONTROL JOINTS

SCALE: 1 1/2" = 1'-0"

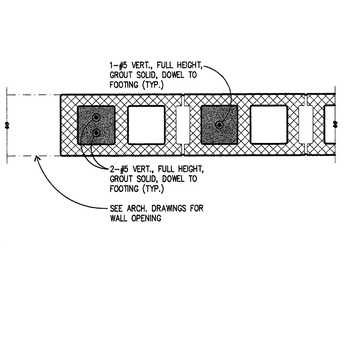

3 S002 TYPICAL MASONRY JAMB REINFORCING DETAIL

SCALE: 1 1/2" = 1'-0"

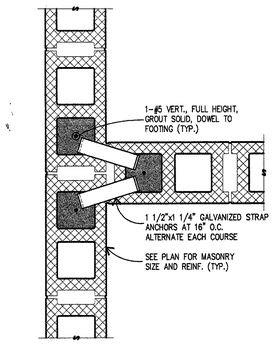

2 S002 TYPICAL MASONRY WALL INTERSECTION

SCALE: 1 1/2" = 1'-0"

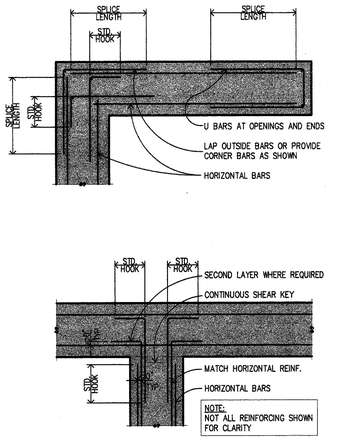

1 S002 TYPICAL HORIZONTAL REINF. AT CORNERS AND INTERSECTIONS

SCALE: 3/4" = 1'-0"

NEUMANN SMITH & ASSOCIATES

Architecture
Planning
Interior Design

400 Galleria Officentre
Suite 555
Southfield, Michigan 48034

248-352-8310
FAX 248-352-1821
NS@neumannsmith.com

Metro Lofts

Royal Oak, Michigan

PENHALE & YATES, INC.
CONSULTING STRUCTURAL ENGINEERS
29200 SOUTHFIELD ROAD, SUITE 207
SOUTHFIELD MICHIGAN 48076
PH 248 569 4446 FAX 248 569 5155

Revisions

MAY 28, 2004 – ISSUED FOR BIDS
MAY 21, 2004 – ISSUED FOR FOUNDATIONS

Date
5-21-2004
Drawn
pm,dm
Checked
pyi
Approved
pyi
Bidpak Number

☐ Preliminary
■ Construction
☐ Record

Do not scale
Use figured dimensions only
Copyright © 2003

Job Number
23091
Title
Typical Details

Scale: 1/8" = 1'-0"

Sheet
S002

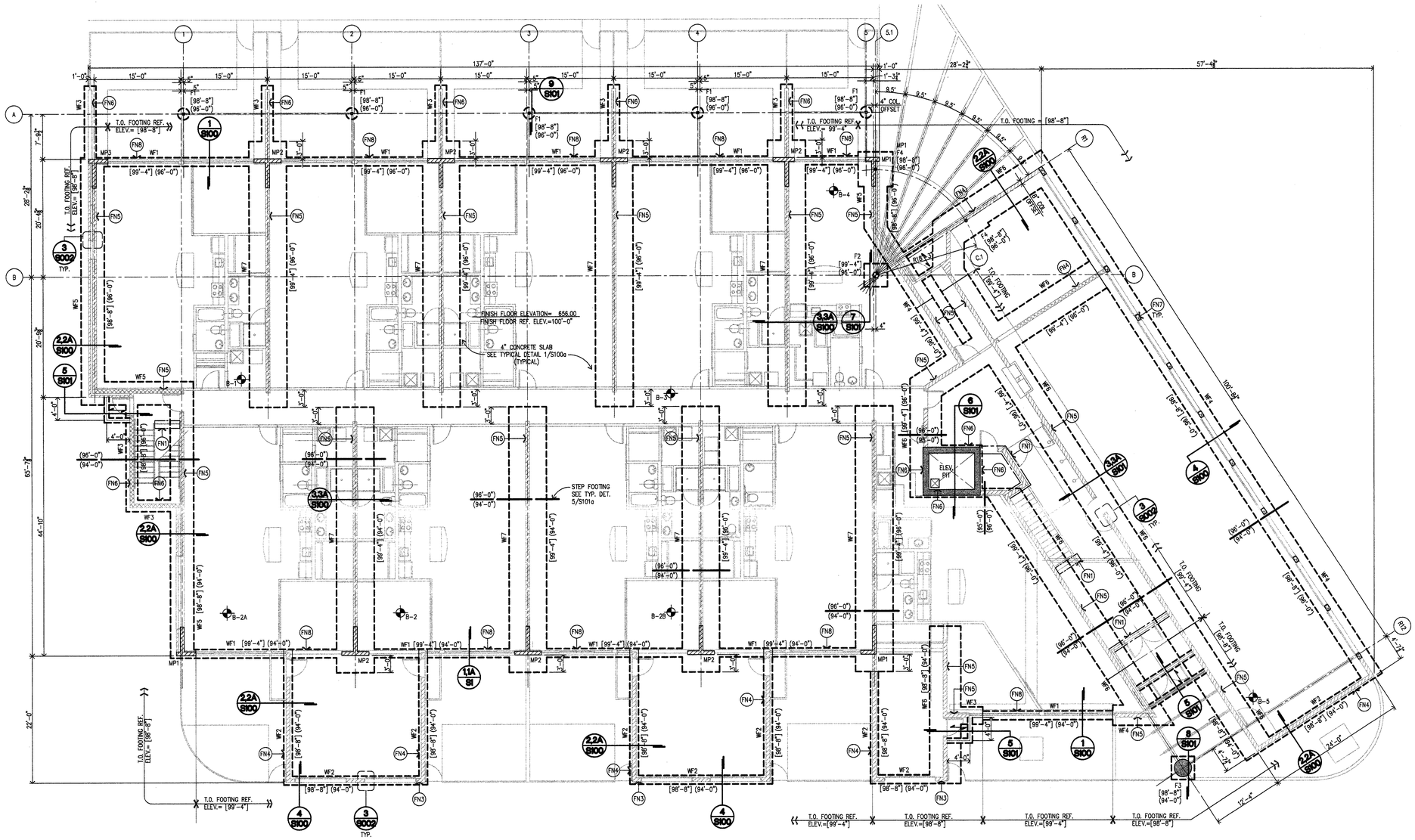

TOP OF FOOTING REF. ELEV.=99'-4"
TYPICAL UNLESS NOTED OTHERWISE BY [XX'-X"]
BOTTOM OF FOOTING REF. ELEV.=98'-0"
TYPICAL UNLESS NOTED OTHERWISE BY (XX'-X")

FOUNDATION PLAN
SCALE: 1/8" = 1'-0"

WALL FOOTING SCHEDULE								ASSUMED ALLOWABLE SOIL PRESSURE = 3500 PSF
	WF7	WF6	WF5	WF4	WF3	WF2	WF1	MARK
	72"	60"	42"	36"	24"	18"	14"	WIDTH
	7-#5	6-#5	5-#5	4-#5	3-#5	2-#5	2-#5	LONGIT. REINF.
	#5 AT 12"	#5 AT 12"	#4 AT 12"	#4 AT 12"	-	-	-	TRANSV. REINF.
							- -	REMARKS

FOOTING SCHEDULE					ASSUMED ALLOWABLE SOIL PRESSURE = 3500 PSF
	F4	F3	F2	F1	MARK
	6'-0"x6'-0"	4'-6"x4'-6"	4'-0"x4'-0"	3'-0"x3'-0"	SIZE
	40"	56"	40"	40"	THICKNESS
	6-#6	5-#5	5-#5	---	REINF. (E.W. BOTT.)
					REMARKS

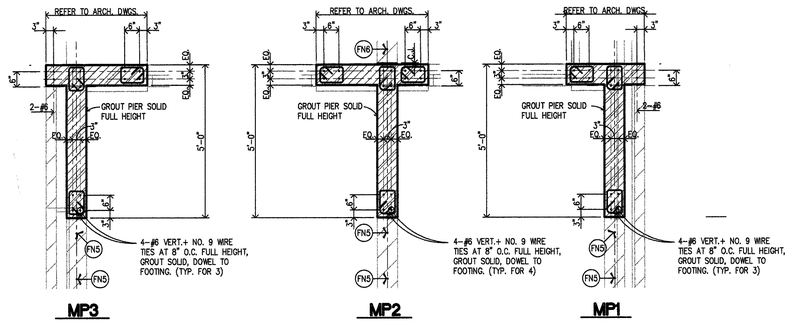

MASONRY PIERS
SCALE: 1/2"=1'-0"

FOUNDATION KEYNOTES LEGEND

UNLESS INDICATED OTHERWISE, ALL DIMENSIONS ARE TO COLUMN CENTERLINE OR FACE OF MASONRY. REFER TO ARCHITECTURAL DRAWINGS FOR ADDITIONAL DIMENSIONS.

◆ INDICATES APPROXIMATE SOIL BORING LOCATION PER REPORT NO. 44440 PREPARED BY TESTING ENGINEERS & CONSULTANTS, INC. (DATED 05-03-04).

(FN1) THICKENED SLAB AT INTERIOR MASONRY PARTITIONS AND STAIR STRINGER BEARING. SEE TYPICAL DETAIL 4/S100a AND ARCHITECTURAL DRAWINGS FOR QUANTITY AND LOCATION.

(FN2) PROVIDE SLEEVE AS REQUIRED FOR MECHANICAL PIPING THRU FOUNDATION. STEP BOTTOM OF FOOTING DOWN AS REQUIRED TO PROVIDE 2-#5 AND MIN. 12" CONCRETE BELOW PIPE.

(FN3) #5 VERTICAL REINFORCEMENT AT 42" O.C. FULL HEIGHT, GROUT SOLID, DOUBLE AT JAMBS, DOWEL INTO FOOTING. EXTEND REINFORCING OVER OPENINGS. HOOK WALL REINFORCEMENT INTO MASONRY LINTELS. LAP WALL REINFORCEMENT WITH STUDS WELDED TO TOP OF STEEL LINTELS.

(FN4) #5 VERTICAL REINFORCEMENT AT 36" O.C. FULL HEIGHT, GROUT SOLID, DOUBLE AT JAMBS, DOWEL INTO FOOTING. EXTEND REINFORCING OVER OPENINGS. HOOK WALL REINFORCEMENT INTO MASONRY LINTELS. LAP WALL REINFORCEMENT WITH STUDS WELDED TO TOP OF STEEL LINTELS.

(FN5) #6 VERTICAL REINFORCEMENT AT 30" O.C. FROM FOUNDATION TO SECOND FLOOR, #5 AT 36" FULL HEIGHT ABOVE SECOND FLOOR, GROUT SOLID, DOUBLE AT JAMBS, DOWEL INTO FOOTING. EXTEND REINFORCING OVER OPENINGS. HOOK WALL REINFORCEMENT INTO MASONRY LINTELS. LAP WALL REINFORCEMENT WITH STUDS WELDED TO TOP OF STEEL LINTELS.

(FN6) #6 VERTICAL REINFORCEMENT AT 30" O.C. FULL HEIGHT, GROUT SOLID, DOUBLE AT JAMBS, DOWEL INTO FOOTING. EXTEND REINFORCING OVER OPENINGS. HOOK WALL REINFORCEMENT INTO MASONRY LINTELS. LAP WALL REINFORCEMENT WITH STUDS WELDED TO TOP OF STEEL LINTELS.

(FN7) 4-#6 VERTICAL REINFORCEMENT (2 EA. JAMB-SEE TYP. DET. 3/S002) AND #5 AT 36" O.C. FULL HEIGHT ABOVE SECOND FLOOR, GROUT SOLID, DOWEL INTO FOOTING. EXTEND REINFORCING OVER OPENINGS. HOOK WALL REINFORCEMENT INTO MASONRY LINTELS. LAP WALL REINFORCEMENT WITH STUDS WELDED TO TOP OF LINTELS.

(FN8) #4 x 24" "I24" DOWELS AT 12" O.C. (18" EMBED.) PLUS CONTINUOUS NOSING BAR.

NEUMANN SMITH & ASSOCIATES

Architecture
Planning
Interior Design

400 Galleria Officentre
Suite 555
Southfield, Michigan 48034

248-352-8310
FAX 248-352-1821
NS@neumannsmith.com

Metro Lofts
Royal Oak, Michigan

PENHALE & YATES, INC.
CONSULTING STRUCTURAL ENGINEERS
29200 SOUTHFIELD ROAD, SUITE 207
SOUTHFIELD MICHIGAN 48076
PH 248 569 4446 FAX 248 569 5155

Revisions

MAY 28, 2004 - ISSUED FOR BIDS
MAY 21, 2004 - ISSUED FOR FOUNDATIONS

Date
5-21-2004
Drawn
pm
Checked
pyl
Approved
pyl
Bidpak Number

Preliminary
Construction
Record

Do not scale
Use figured dimensions only
Copyright © 2003

Job Number
23091
Title
Foundation Plan

Scale: 1/8" = 1'-0"
Sheet
S100

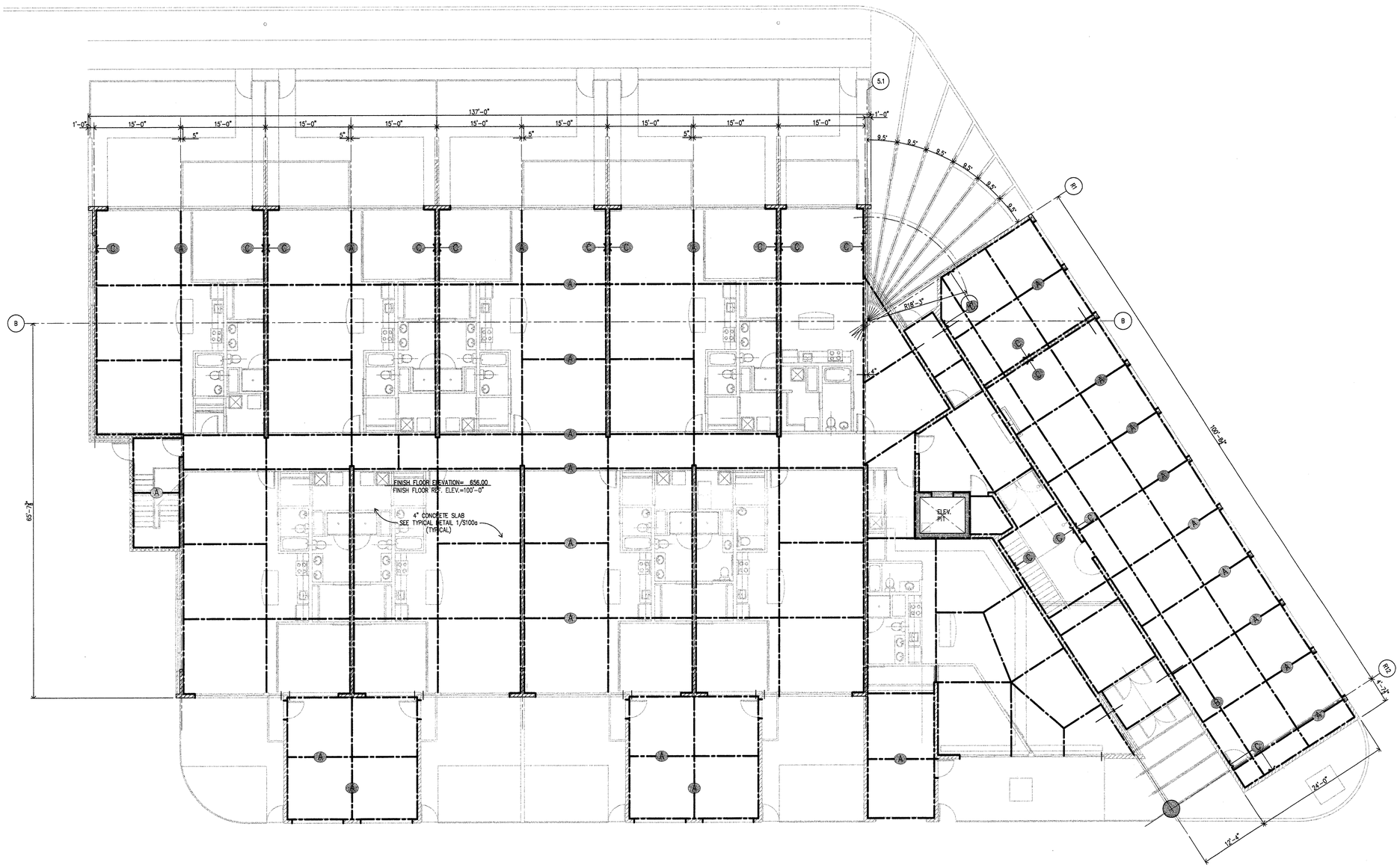

FLOOR SLAB JOINT PLAN
SCALE: 1/8" = 1'-0"

FLOOR SLAB LEGEND

- (A) INDICATES CONTROL JOINT. SEE TYPICAL DETAIL 2/S100a.
- (B) INDICATES CONSTRUCTION JOINT. SEE TYPICAL DETAIL 3/S100a.
- (C) INDICATES CONTINUOUS PRE-MOLDED JOINT FILLER (TYPICAL AT SLAB EDGES).

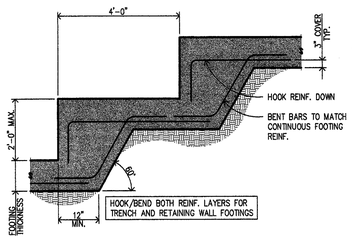

5 S100a **TYPICAL FOOTING STEP**
SCALE: NONE

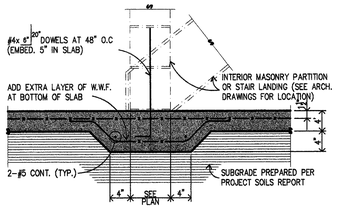

4 S100a **TYPICAL THICKENED SLAB**
SCALE: 1" = 1'-0"

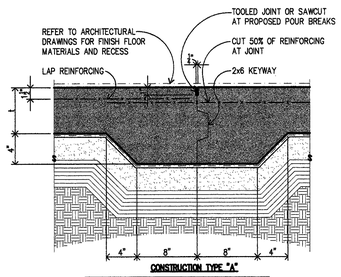

NOTE:
SEE SECTION 1/S100a FOR TYPICAL MATERIALS, NOTES, DIMENSIONS, ETC.

3 S100a **TYPICAL CONSTRUCTION JOINT**
SCALE: 1 1/2" = 1'-0"

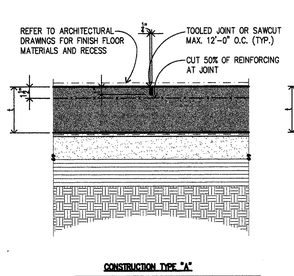

NOTE:
SEE SECTION 1/S100a FOR TYPICAL MATERIALS, NOTES, DIMENSIONS, ETC.

2 S100a **TYPICAL CONTROL JOINT**
SCALE: 1 1/2" = 1'-0"

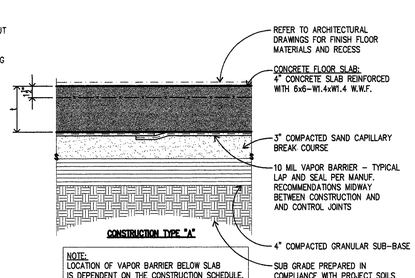

NOTE:
LOCATION OF VAPOR BARRIER BELOW SLAB IS DEPENDENT ON THE CONSTRUCTION SCHEDULE. CONTRACTOR SHALL COORDINATE THE USE OF CONSTRUCTION TYPE "A" AND "B" WITH THE PROJECT SCHEDULE.

1 S100a **TYPICAL CONCRETE SLAB**
SCALE: 1 1/2" = 1'-0"

NEUMANN SMITH & ASSOCIATES

Architecture
Planning
Interior Design

400 Galleria Officentre
Suite 555
Southfield, Michigan 48034

248-352-8310
FAX 248-352-1821
NS@neumannsmith.com

Metro Lofts
Royal Oak, Michigan

PENHALE & YATES, INC.
CONSULTING STRUCTURAL ENGINEERS
28200 SOUTHFIELD ROAD, SUITE 207
SOUTHFIELD MICHIGAN 48076
PH 248 569 4446 FAX 248 569 5155

Revisions

MAY 28, 2004 - ISSUED FOR BIDS
MAY 21, 2004 - ISSUED FOR FOUNDATIONS

Date **5-21-2004**
Drawn **pm**
Checked **pyi**
Approved **pyi**
Bidpak Number

☐ Preliminary
■ Construction
☐ Record

Do not scale
Use figured dimensions only
Copyright © 2003

Job Number **23091**
Title **Floor Slab Joint Plan**

Scale: 1/8" = 1'-0"
Sheet **S100a**

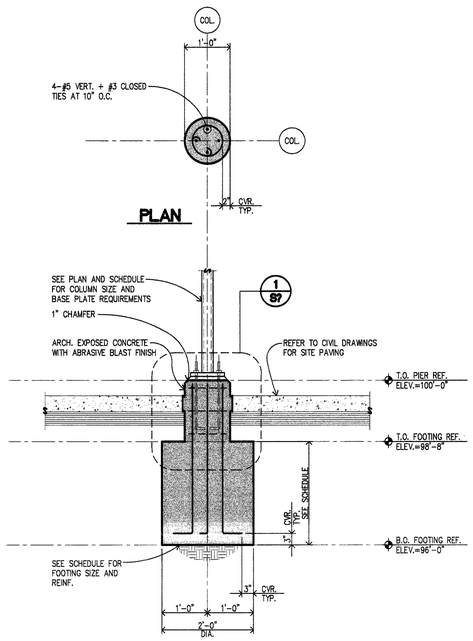

9 S101 **TYPICAL COLUMN FOOTING**
SCALE: 3/4" = 1'-0"

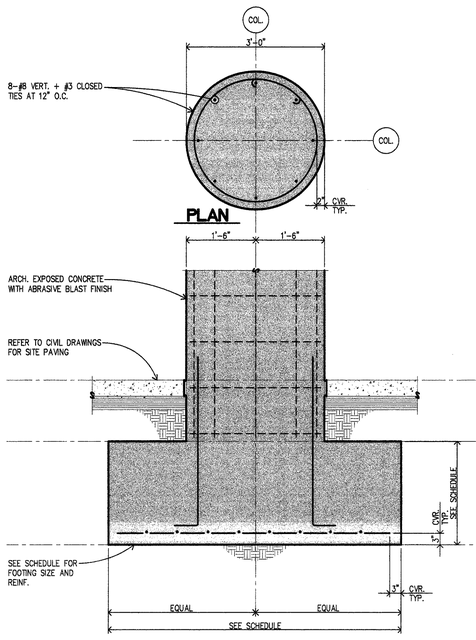

8 S101 **TYPICAL COLUMN FOOTING**
SCALE: 3/4" = 1'-0"

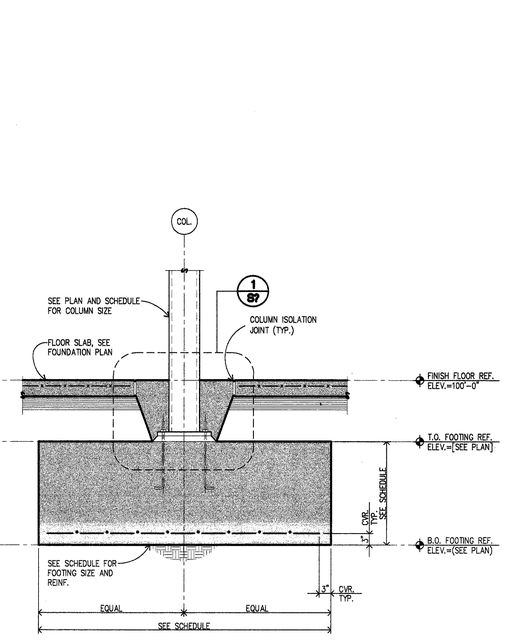

7 S101 **TYPICAL COLUMN FOOTING**
SCALE: 3/4" = 1'-0"

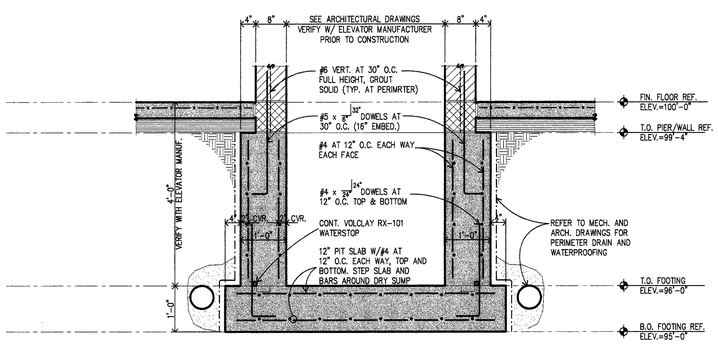

6 S101 **ELEVATOR PIT FOUNDATION**
SCALE: 3/4" = 1'-0"

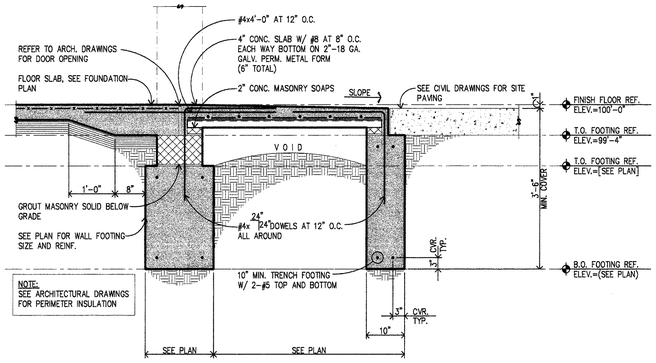

5 S101 **TYPICAL ENTRANCE SLAB**
SCALE: 3/4" = 1'-0"

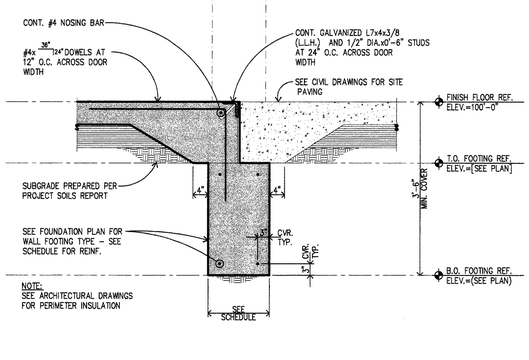

4 S101 **TYPICAL EXTERIOR WALL FOOTING**
SCALE: 3/4" = 1'-0"

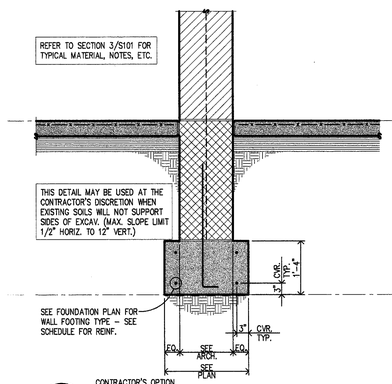

CONTRACTOR'S OPTION

3A S101 **TYPICAL INTERIOR WALL FOOTING**
SCALE: 3/4" = 1'-0"

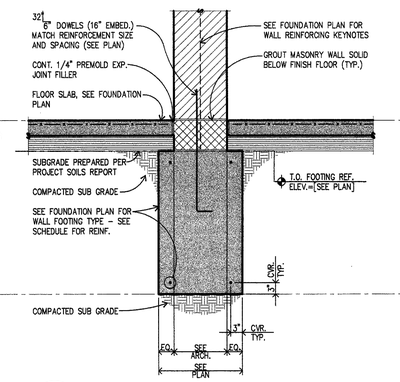

3 S101 **TYPICAL INTERIOR WALL FOOTING**
SCALE: 3/4" = 1'-0"

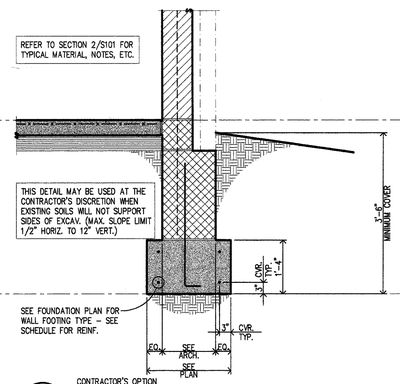

CONTRACTOR'S OPTION

2A S101 **TYPICAL EXTERIOR WALL FOOTING**
SCALE: 3/4" = 1'-0"

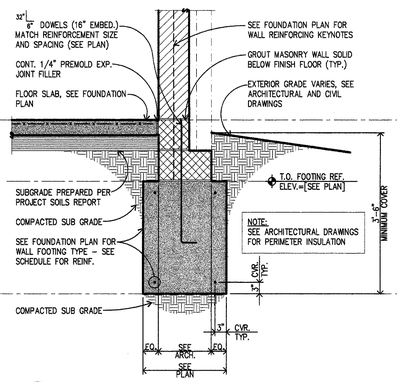

2 S101 **TYPICAL EXTERIOR WALL FOOTING**
SCALE: 3/4" = 1'-0"

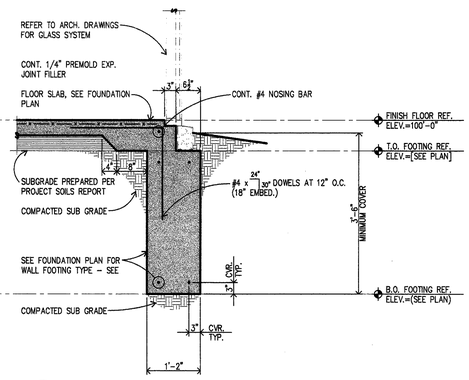

1 S101 **TYPICAL EXTERIOR WALL FOOTING**
SCALE: 3/4" = 1'-0"

NEUMANN SMITH & ASSOCIATES

Architecture
Planning
Interior Design

400 Galleria Officentre
Suite 555
Southfield, Michigan 48034

248-352-8310
FAX 248-352-1821
NS@neumannsmith.com

Metro Lofts
Royal Oak, Michigan

PENHALE & YATES, INC.
CONSULTING STRUCTURAL ENGINEERS
29200 SOUTHFIELD ROAD, SUITE 207
SOUTHFIELD MICHIGAN 48076
PH 248 569 4446 FAX 248 569 5155

Revisions

MAY 28, 2004 – ISSUED FOR BIDS
MAY 21, 2004 – ISSUED FOR FOUNDATIONS

Date
5-21-2004

Drawn
dm

Checked
pyl

Approved
pyl

Bidpak Number

☐ Preliminary
■ Construction
☐ Record

Do not scale
Use figured dimensions only
Copyright © 2003

Job Number
23091

Title
Foundation Details

Scale: 1/8" = 1'-0"

Sheet
S101

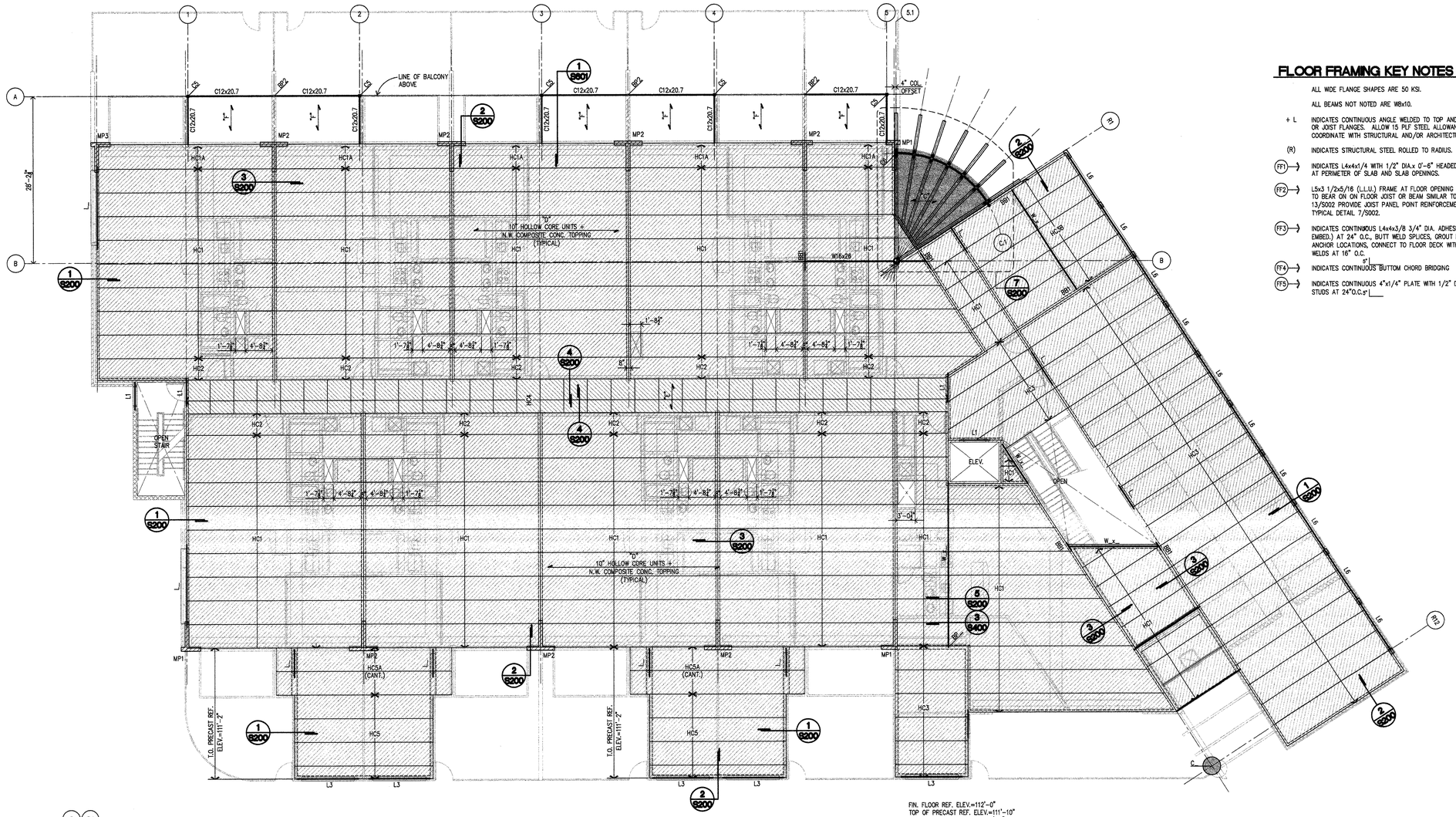

FIN. FLOOR REF. ELEV.=112'-0"
TOP OF PRECAST REF. ELEV.=111'-10"
TOP OF STEEL REF. ELEV.=112'-0"
TYPICAL UNLESS NOTED OTHERWISE BY (-XX")

SECOND FLOOR FRAMING PLAN
SCALE: 1/8" = 1'-0"

FLOOR FRAMING KEY NOTES LEGEND

ALL WIDE FLANGE SHAPES ARE 50 KSI.

ALL BEAMS NOT NOTED ARE W8x10.

+ L — INDICATES CONTINUOUS ANGLE WELDED TO TOP AND/OR BOTTOM BEAM OR JOIST FLANGES. ALLOW 15 PLF STEEL ALLOWANCE WEIGHT. COORDINATE WITH STRUCTURAL AND/OR ARCHITECTURAL DETAILS.

(R) — INDICATES STRUCTURAL STEEL ROLLED TO RADIUS.

FF1 — INDICATES L4x4x1/4 WITH 1/2" DIA.x 0'-6" HEADED STUDS AT 18"O.C. AT PERIMETER OF SLAB AND SLAB OPENINGS.

FF2 — L5x3 1/2x5/16 (L.L.U.) FRAME AT FLOOR OPENING COPE VERTICAL LEG TO BEAR ON ON FLOOR JOIST OR BEAM SIMILAR TO TYPICAL DETAIL 13/S002 PROVIDE JOIST PANEL POINT REINFORCEMENT AS REQ'D PER TYPICAL DETAIL 7/S002.

FF3 — INDICATES CONTINUOUS L4x4x3/8 3/4" DIA. ADHESIVE ANCHORS (3 1/2" EMBED.) AT 24" O.C., BUTT WELD SPLICES, GROUT MASONRY SOLID AT ANCHOR LOCATIONS, CONNECT TO FLOOR DECK WITH 5/8" DIA. PUDDLE WELDS AT 16" O.C.

FF4 — INDICATES CONTINUOUS BUTTOM CHORD BRIDGING

FF5 — INDICATES CONTINUOUS 4"x1/4" PLATE WITH 1/2" DIA.x0'-6" HEADED STUDS AT 24"O.C.5'

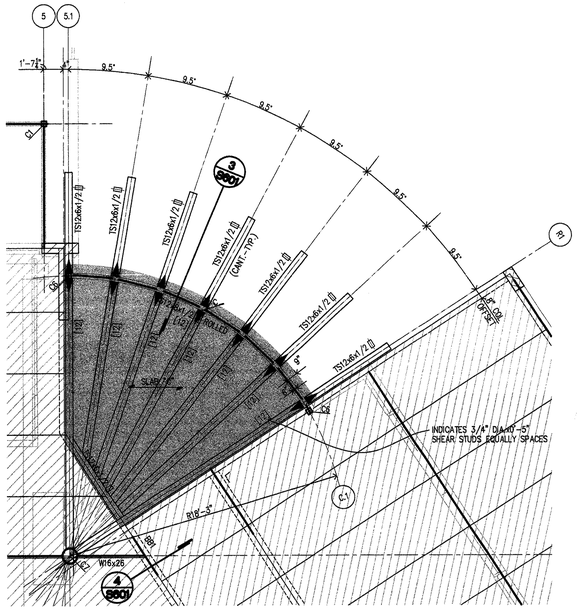

FLOOR FRAMING PLAN DETAIL
SCALE: 1/4" = 1'-0"

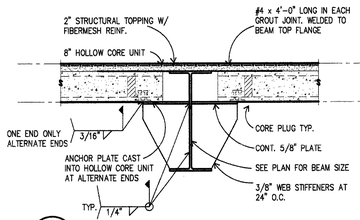

TYPICAL HOLLOW CORE BEARING
SCALE: 3/4" = 1'-0"

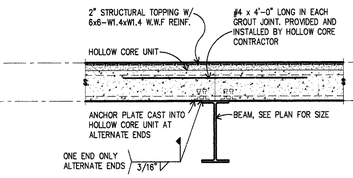

TYPICAL HOLLOW CORE BEARING
SCALE: 3/4" = 1'-0"

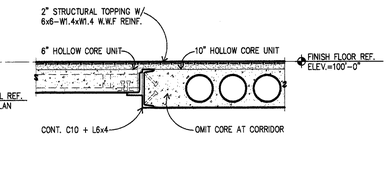

TYP. HOLLOW CORE BEARING
SCALE: 3/4" = 1'-0"

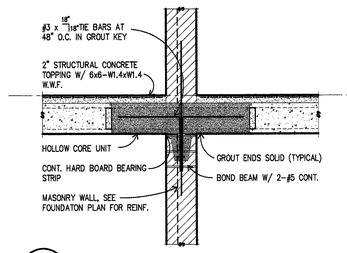

TYP. HOLLOW CORE BEARING
SCALE: 3/4" = 1'-0"

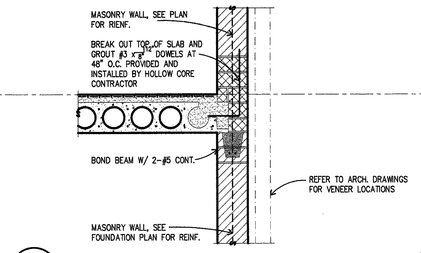

TYP. HOLLOW CORE BEARING
SCALE: 3/4" = 1'-0"

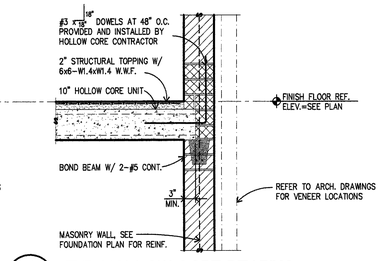

TYP. HOLLOW CORE BEARING
SCALE: 3/4" = 1'-0"

NEUMANN SMITH & ASSOCIATES

Architecture
Planning
Interior Design

400 Galleria Officentre
Suite 555
Southfield, Michigan 48034

248-352-8310
FAX 248-352-1821
NS@neumannsmith.com

Metro Lofts
Royal Oak, Michigan

PENHALE & YATES, INC.
CONSULTING STRUCTURAL ENGINEERS
29200 SOUTHFIELD ROAD, SUITE 207
SOUTHFIELD MICHIGAN 48076
PH 248 569 4446 FAX 248 569 5155

Revisions

MAY 28, 2004 – ISSUED FOR BIDS

Date: 5-28-2004
Drawn: pm,ld
Checked: pyi
Approved: pyi
Bidpak Number

☐ Preliminary
■ Construction
☐ Record

Do not scale
Use figured dimensions only
Copyright © 2003

Job Number: 23091

Title: **Second Floor Framing Plan**

Scale: 1/8" = 1'-0"

Sheet: **S200**

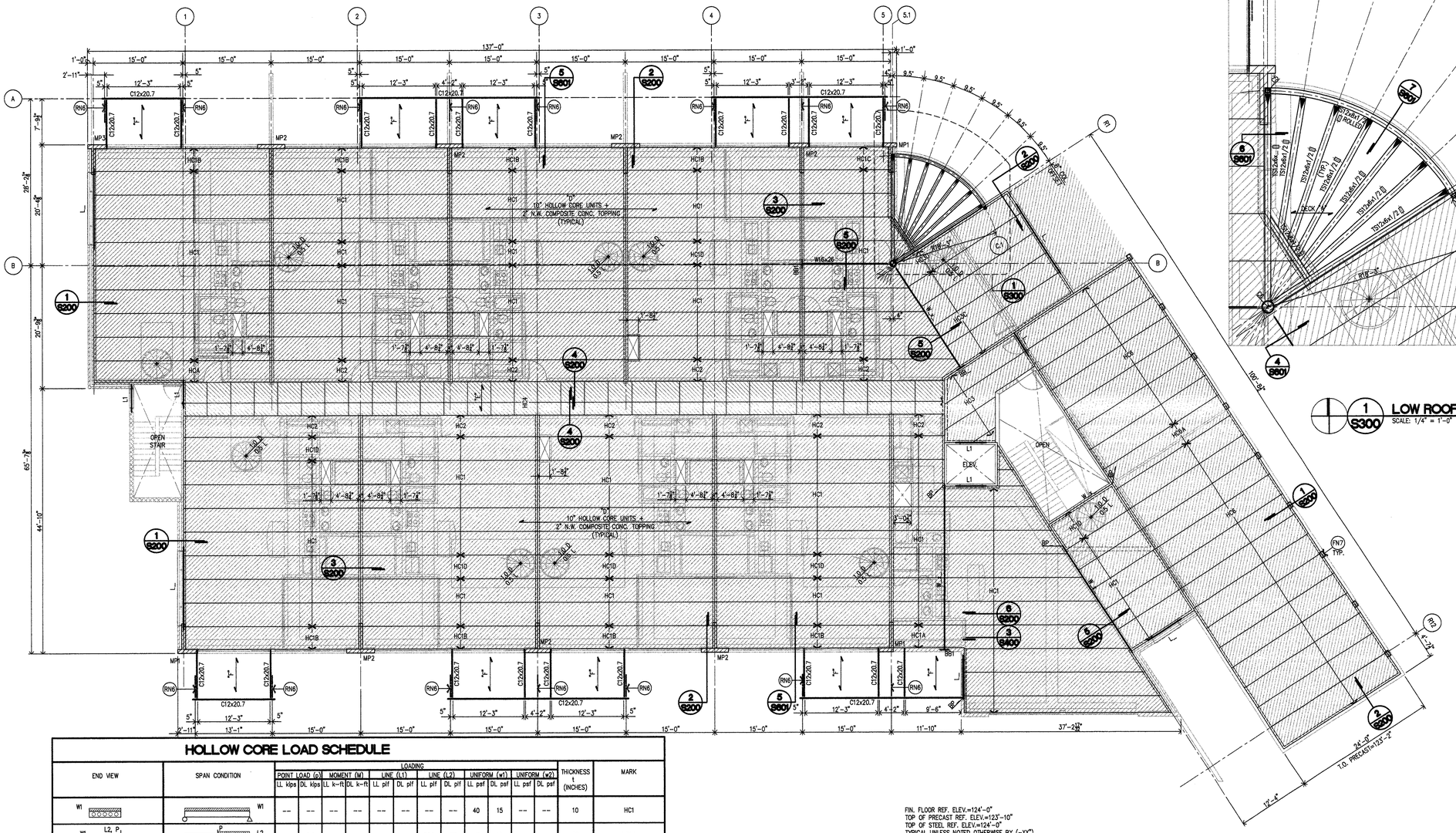

FIN. FLOOR REF. ELEV.=124'-0"
TOP OF PRECAST REF. ELEV.=123'-10"
TOP OF STEEL REF. ELEV.=124'-0"
TYPICAL UNLESS NOTED OTHERWISE BY (-XX")

THIRD FLOOR FRAMING PLAN
SCALE: 1/8" = 1'-0"

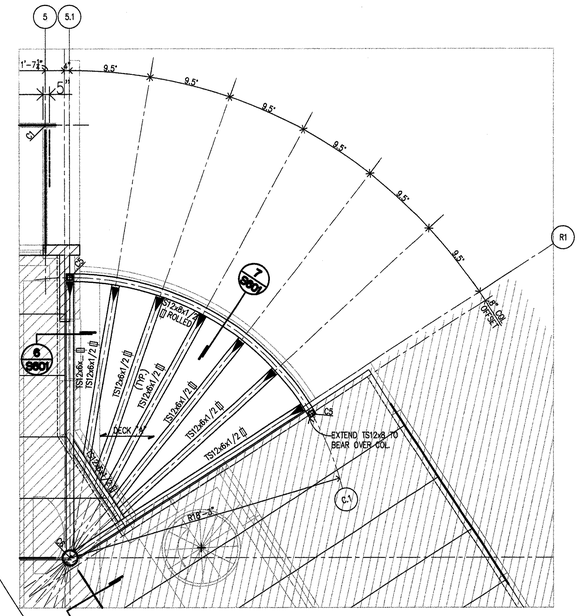

LOW ROOF PLAN DETAIL
SCALE: 1/4" = 1'-0"

HOLLOW CORE LOAD SCHEDULE

END VIEW	SPAN CONDITION	LOADING: POINT LOAD (p) LL kips	POINT LOAD (p) DL kips	MOMENT (M) LL k-ft	MOMENT (M) DL k-ft	LINE (L1) LL plf	LINE (L1) DL plf	LINE (L2) LL plf	LINE (L2) DL plf	UNIFORM (w1) LL psf	UNIFORM (w1) DL psf	UNIFORM (w2) LL psf	UNIFORM (w2) DL psf	THICKNESS t (INCHES)	MARK
W1	W1	--	--	--	--	--	--	--	--	40	15	--	--	10	HC1
W1 L2, P SP	L2 W1	--	0.2	--	--	--	--	304	58	40	15	--	--	10	HC1A
W1 L2, P SP	W1	--	0.2	--	--	--	--	304	58	40	15	--	--	10	HC1B
W1 P, L2 SP	W1	--	0.2	--	--	--	--	304	58	40	15	--	--	10	HC1C
P W1	L2 W1	0.5	1.0	--	--	--	--	--	--	40	15	--	--	10	HC1D
W1 L1	L1 W1	--	--	--	--	240	255	--	--	40	15	--	--	10	HC2
L1 P W1	L1 W1	0.5	1.0	--	--	240	255	--	--	40	15	--	--	10	HC2A
W2,W1	W2 (3A) W1	--	--	--	--	--	--	--	--	125	20	20	148	10	HC3,3A
W1	W1	--	--	--	--	--	--	--	--	125	20	--	--	10	HC3B
L1 W1	L1 W1	--	--	--	--	--	--	--	--	125	20	--	--	10	HC3C
P L1 W1	P L1 W1	0.5	1.0	--	--	--	--	--	--	125	20	--	--	10	HC3D
W1	W1	--	--	--	--	--	--	--	--	80	10	--	--	6	HC4
W1 P,M	P M W1	--	1.0	5.3	--	--	--	--	--	125	20	--	--	10	HC5
W1 P,M	P M W1	--	1.0	5.3	--	--	--	--	--	125	20	--	--	10	HC5A
W1	W1	--	--	--	--	--	--	--	--	148	20	--	--	10	HC6
P,M W1	P M P M P M	--	1.0	5.3	--	--	--	--	--	148	20	--	--	10	HC6A

STEEL LINTEL SCHEDULE

MIN. 8" BEARING (U.N.O.) EACH END
SEE TYP. DETAILS 2 AND 3/S4.01 FOR BEARING REQUIREMENTS (TYP.)

MARK	DESCRIPTION	REMARKS
L1	-	BP_ EA. END

BEARING PLATE SCHEDULE

MARK	DESCRIPTION	REMARKS
BP1	-	TYPICAL K-SERIES JOIST BEARING PLATE W/ (2) 1/2" DIA.x6"-6" HEADED ANCHORS
BP2	-	W/ (2) 3/4" DIA.x1'-4" HEADED ANCHORS ON 3 COURSES SOLID MASONRY
BP3	-	-

NEUMANN SMITH & ASSOCIATES

Architecture
Planning
Interior Design

400 Galleria Officentre
Suite 555
Southfield, Michigan 48034

248-352-8310
FAX 248-352-1821
NS@neumannsmith.com

Metro Lofts
Royal Oak, Michigan

PENHALE & YATES, INC.
CONSULTING STRUCTURAL ENGINEERS
29200 SOUTHFIELD ROAD, SUITE 207
SOUTHFIELD MICHIGAN 48076
PH 248 569 4446 FAX 248 569 5155

Revisions

MAY 28, 2004 – ISSUED FOR BIDS

Date 5-28-2004
Drawn pm,ld
Checked pyi
Approved pyi
Bidpak Number

☐ Preliminary
■ Construction
☐ Record

Do not scale
Use figured dimensions only
Copyright © 2003

Job Number 23091

Title
Third Floor Framing Plan

Scale: 1/8" = 1'-0"

Sheet **S300**

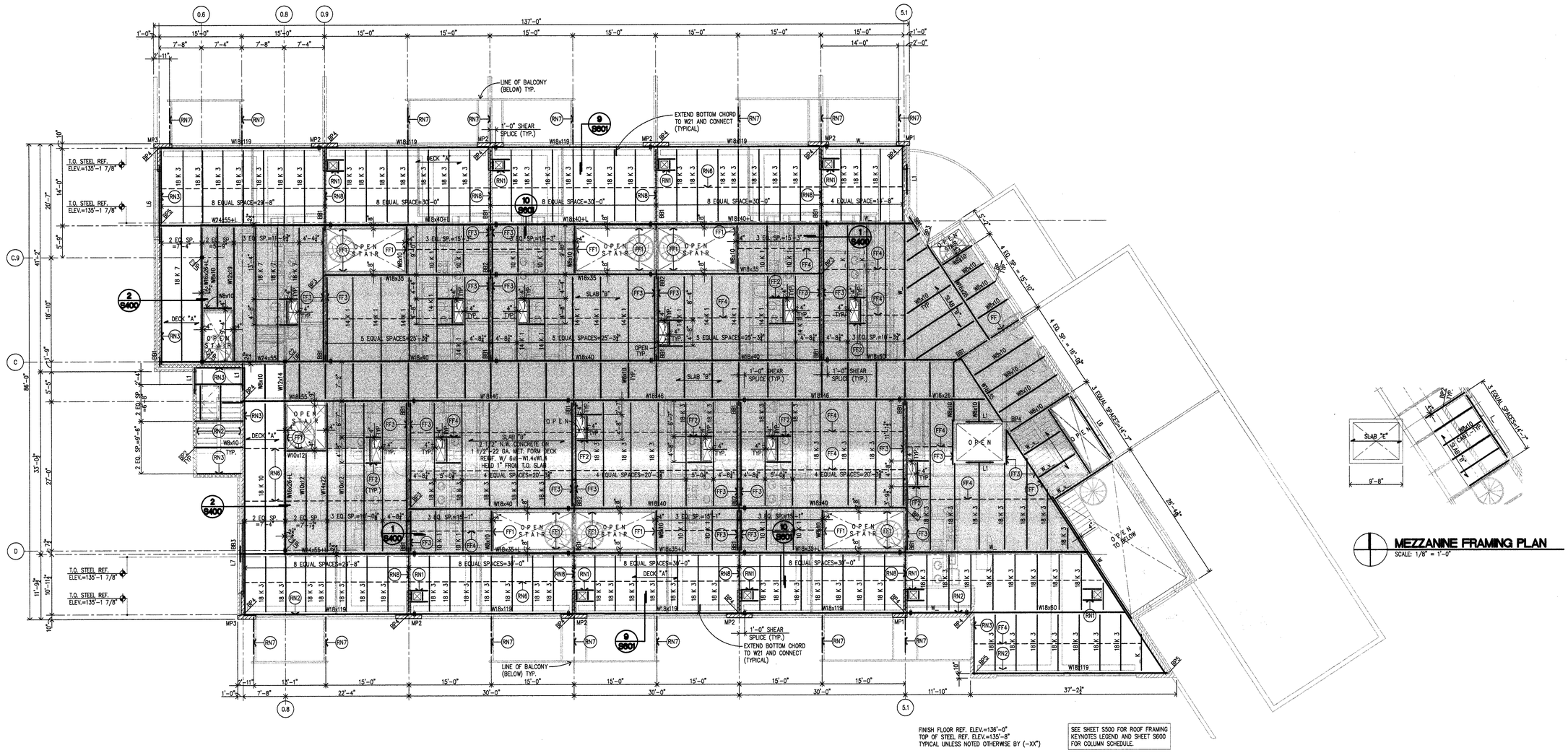

FINISH FLOOR REF. ELEV.=136'-0"
TOP OF STEEL REF. ELEV.=135'-8"
TYPICAL UNLESS NOTED OTHERWISE BY (-XX")

SEE SHEET S500 FOR ROOF FRAMING KEYNOTES LEGEND AND SHEET S600 FOR COLUMN SCHEDULE.

FOURTH FLOOR AND LOW ROOF FRAMING PLAN
SCALE: 1/8" = 1'-0"

MEZZANINE FRAMING PLAN
SCALE: 1/8" = 1'-0"

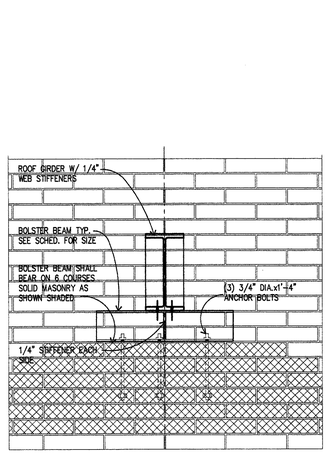

3/S400 BOLSTER BEAM DETAIL
SCALE: 3/4" = 1'-0"

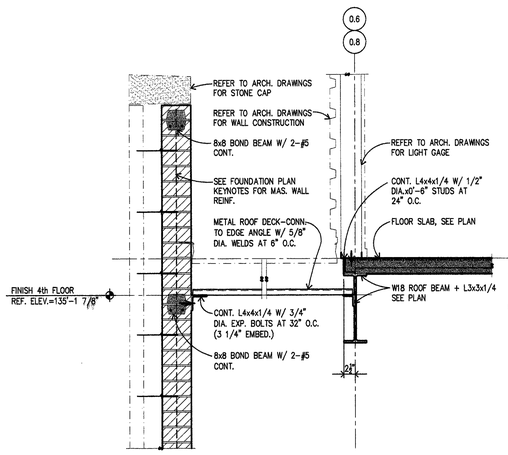

2/S400 STRUCTURAL SECTION
SCALE: 3/4" = 1'-0"

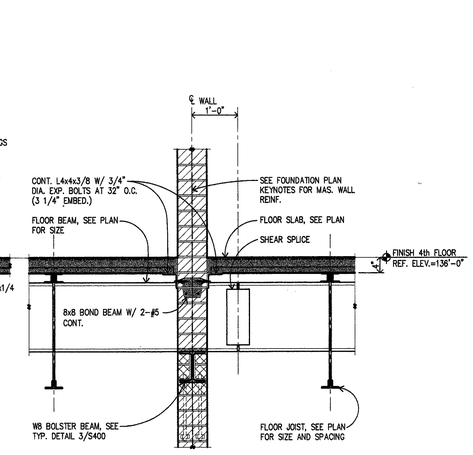

1/S400 STRUCTURAL SECTION
SCALE: 3/4" = 1'-0"

NEUMANN SMITH & ASSOCIATES

Architecture
Planning
Interior Design

400 Galleria Officentre
Suite 555
Southfield, Michigan 48034

248-352-8310
FAX 248-352-1821
NS@neumannsmith.com

Metro Lofts
Royal Oak, Michigan

PENHALE & YATES, INC.
CONSULTING STRUCTURAL ENGINEERS
29200 SOUTHFIELD ROAD, SUITE 207
SOUTHFIELD MICHIGAN 48076
PH 248 569 4446 FAX 248 569 5155

Revisions

MAY 28, 2004 – ISSUED FOR BIDS

Date
5-28-2004
Drawn
pm,dm
Checked
pyi
Approved
pyi
Bidpak Number

☐ Preliminary
■ Construction
☐ Record

Do not scale
Use figured dimensions only
Copyright © 2003

Job Number
23091
Title
Fourth Floor and Low Roof Framing Plan

Scale: 1/8" = 1'-0"

Sheet
S400

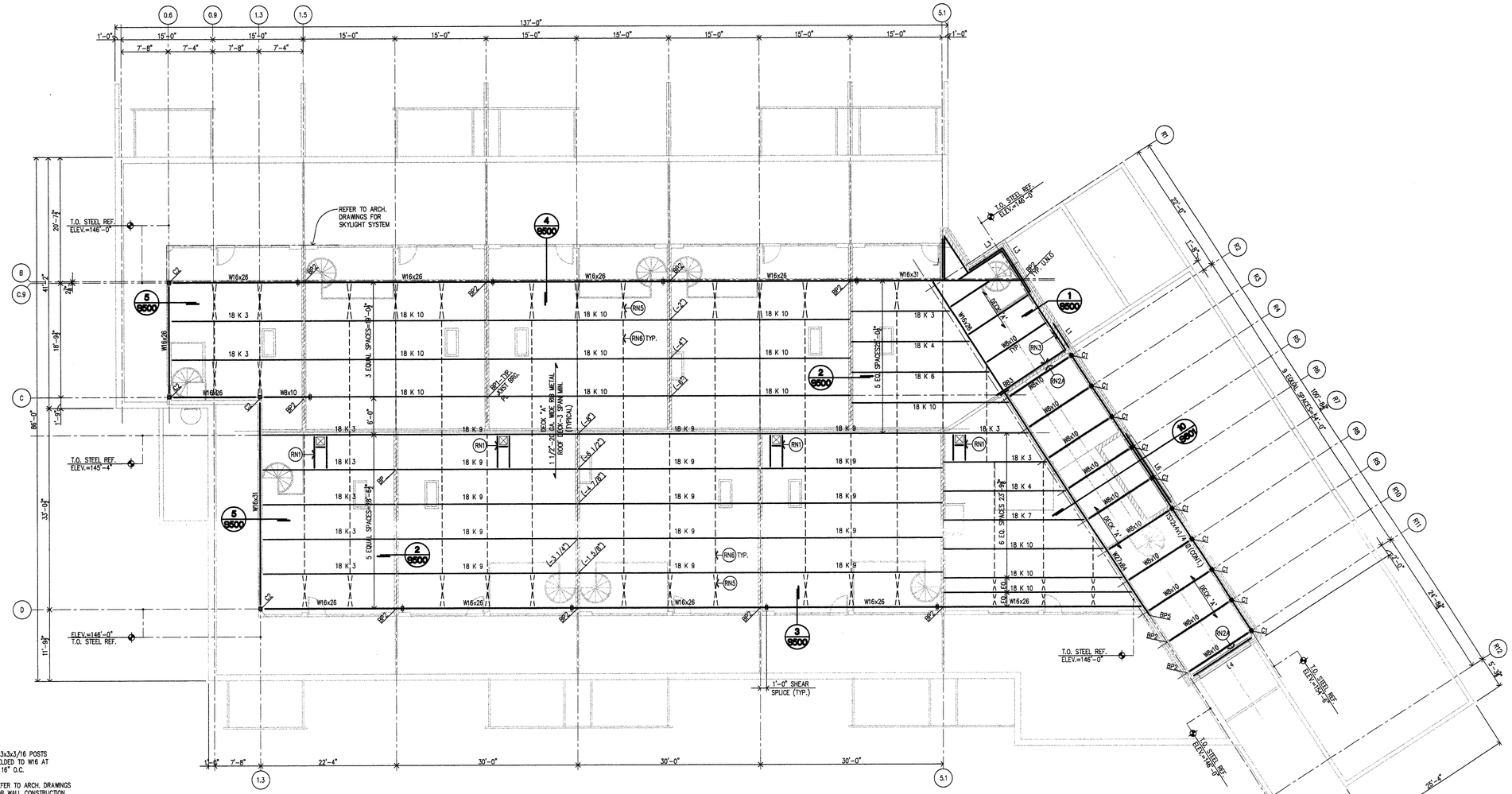

TOP OF STEEL REF. ELEV.=146'-0"
TYPICAL UNLESS NOTED OTHERWISE BY (-XX")

HIGH ROOF FRAMING PLAN
SCALE: 1/8" = 1'-0"

5 S500 STRUCTURAL SECTION
SCALE: 3/4" = 1'-0"

4 S500 STRUCTURAL SECTION
SCALE: 3/4" = 1'-0"

3 S500 STRUCTURAL SECTION
SCALE: 3/4" = 1'-0"

2 S500 TYPICAL JOIST ANCHORAGE
SCALE: 3/4" = 1'-0"

1 S500 TYPICAL JOIST BEARING
SCALE: 3/4" = 1'-0"

ROOF DECK/FLOOR SLAB KEY NOTES LEGEND

- DECK "A" — INDICATES 1 1/2"-20 GA. WIDE RIB GALVANIZED METAL METAL ROOF DECK, 3 SPAN CONTINUOUS. (TYPICAL THROUGHOUT U.N.O).
- DECK "B" — INDICATES 2 1/2" NORMAL WEIGHT CONCRETE ON 1 1/2"-GA. METAL FORM DECK (4" TOTAL) REINFORCE WITH 6x6-W1.4xW1.4 W.W.F. HELD 1" FROM TOP OF SLAB
- DECK "C" — INDICATES 4 1/2" NORMAL WEIGHT CONCRETE ON 1 1/2"-GA. METAL FORM DECK (6" TOTAL) REINFORCE WITH 6x6-W1.4xW1.4 W.W.F. HELD 1" FROM TOP OF SLAB
- DECK "D" — 2(+/-) NORMAL WEIGHT CONCRETE REINFORCED WITH FIBERMESH TOPPING ON 10" HOLLOW CORE UNITS
- DECK "E" — 2(+/-) NORMAL WEIGHT CONCRETE REINFORCED WITH FIBERMESH TOPPING ON 6" HOLLOW CORE UNITS

ROOF FRAMING KEY NOTES LEGEND

- ALL WIDE FLANGE SHAPES ARE 50 KSI.
- INDICATES ACOUSTICAL ROOF DECK.
- INDICATES FLUSH WELDED MOMENT CONNECTION WITHOUT EXPOSED CLIPS, BOLTS, ETC. BETWEEN TUBE BEAM AND TUBE COLUMN. REFER TO SPECIFICATIONS FOR "ARCHITECTURALLY EXPOSED STRUCTURAL STEEL" REQUIREMENTS.
- INDICATES FLUSH MOMENT CONNECTION FOR FULL CAPACITY OF CANTILEVERED BEAM.
- BP — INDICATES BEARING PLATE EACH END OF ROOF BEAM OR JOIST. SEE SHEET S600 FOR SCHEDULE. REFER TO LINTEL SCHEDULE FOR LINTEL BEARING PLATE SIZES AND ANCHORS.
- +L — INDICATES CONTINUOUS L2 1/2x2x1/4 DECK SUPPORT WELDED TO TOP OF BEAM AT DECK ORIENTATION CHANGE.
- +2L — INDICATES CONTINUOUS L3x3x1/4 FASCIA SUPPORT ANGLE TOP AND BOTTOM WELDED TO BEAM OR JOIST FLANGES.
- (R) — INDICATES STRUCTURAL STEEL ROLLED TO RADIUS.
- BB1 — INDICATES W8x24x3'-0" BOLSTER BEAM PER TYP. DETAILS 5 AND 6/S5.4.
- (RN1) — L3x3x1/4 FRAMING FOR ROOF SUMPS PER TYPICAL DETAILS C AND D/A5.1 COORDINATE WITH ROOF DECK MANUFACTURER'S STANDARD ROOF SUMP.
- (RN2) — CONTINUOUS L3x3x1/4 WITH 3/4" DIA. EXP. BOLTS (3 1/4" EMBED.) AT 24" O.C., BUTT WELD SPLICES, GROUT MASONRY SOLID AT BOLT LOCATIONS, CONNECT TO ROOF DECK WITH 5/8" DIA. PUDDLE WELDS AT 6" O.C.
- (RN2) — CONTINUOUS 5/16"x3'1 5/8" BENT PLATE WITH 3/4" DIA. EXP. BOLTS (3 1/4" EMBED.) AT 24" O.C., BUTT WELD SPLICES, GROUT MASONRY SOLID AT BOLT LOCATIONS, CONNECT TO ROOF DECK WITH 5/8" DIA. PUDDLE WELDS AT 6" O.C.
- (RN3) — CONTINUOUS L4x4x1/4 WITH 3/4" DIA. EXP. BOLTS (3 1/4" EMBED.) AT 32" O.C., BUTT WELD SPLICES, GROUT MASONRY SOLID AT BOLT LOCATIONS, CONNECT TO ROOF DECK WITH 5/8" DIA. PUDDLE WELDS AT 6" O.C.
- (RN4) — L5x3 1/2x5/16 (L.L.V.) FRAME FOR MECHANICAL UNITS PER TYPICAL DETAIL 6/S4.4 COORDINATE EXACT SIZE AND LOCATION WITH MECHANICAL CONTRACTOR. ADD JOIST PANEL POINT AS REQUIRED PER TYPICAL DETAIL 7/S4.4.
- (RN5) — L2 1/2"x2x1/4" BOLTED X-BRIDGING.
- (RN6) — CONTINUOUS BOTTOM CHORD BRIDGING.
- (RN7) — 1 1/2" DIA. TIE-BACK ROD WITH 2" DIA. PIN AND No. 4 CLEVISES WITH OPPOSITE HAND THREAD EACH END.
- (RN8) — CONTINUOUS 4"x1/4" PLATE WITH 1/2" DIA.x0'-6" HEADED STUDS AT 24" O.C. GROUT SOLID IN MASONRY BOND BEAM W/ 2-#5 CONC. BOTTOM BARS.

NEUMANN SMITH & ASSOCIATES

Architecture
Planning
Interior Design

400 Galleria Officentre
Suite 555
Southfield, Michigan 48034

248-352-8310
FAX 248-352-1821
NS@neumannsmith.com

Metro Lofts
Royal Oak, Michigan

PENHALE & YATES, INC.
CONSULTING STRUCTURAL ENGINEERS
28200 SOUTHFIELD ROAD, SUITE 207
SOUTHFIELD MICHIGAN 48076
PH 248 569 4446 FAX 248 569 5155

Revisions

6.11.2004

MAY 28, 2004 - ISSUED FOR BIDS
MAY 21, 2004 - ISSUED FOR FOUNDATIONS

Date 5-28-2004
Drawn pm,dm
Checked pyi
Approved pyi
Bidpak Number

☐ Preliminary
■ Construction
☐ Record

Do not scale
Use figured dimensions only
Copyright © 2003

Job Number 23091
Title **High Roof Framing Plan**

Scale: 1/8" = 1'-0"
Sheet **S500**

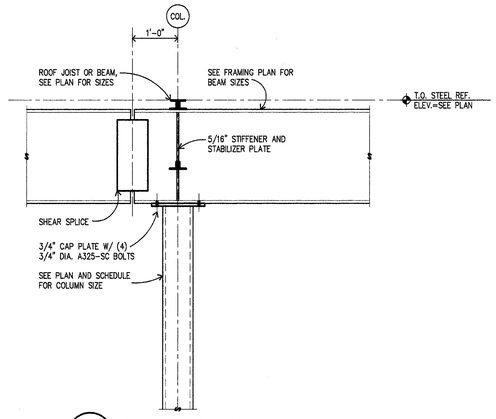

4 S600 **TYPICAL CAPPED COLUMN**
SCALE: 3/4" = 1'-0"

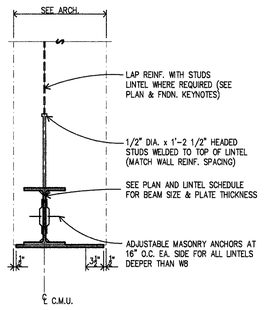

3 S600 **TYPICAL STEEL LINTEL SECTION**
SCALE: 1" = 1'-0"

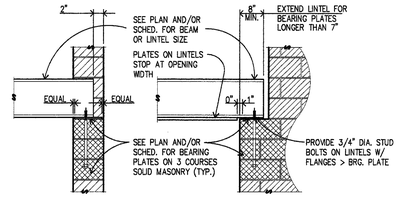

2 S600 **TYPICAL BEAM/LINTEL BEARING**
SCALE: NONE

BEARING PLATE / BOLSTER BEAM SCHEDULE

MARK	DESCRIPTION	REMARKS
BP1	6"x3/8"x0'-10"	TYPICAL K-SERIES JOIST BEARING PLATE W/ (2) 1/2" DIA.x0'-8" HEADED ANCHORS
BP2	7"x3/8"x0'-7"	W/(2) 3/4 DIA.x1'-4" HEADED ANCHORS
BP3	7"x3/8x0'-11"	W/(2) 3/4 DIA.x1'-4" HEADED ANCHORS
BP4	7"x3/8x1'-3"	W/(2) 3/4 DIA.x1'-4" HEADED ANCHORS
BP5	7"x3/8x2'-0"	W/(2) 3/4 DIA.x1'-4" HEADED ANCHORS
BP6	11"x3/8x0'-11"	W/(2) 3/4 DIA.x1'-4" HEADED ANCHORS
BP7	11"x3/8x1'-3"	W/(2) 3/4 DIA.x1'-4" HEADED ANCHORS
BB1	W8x18 x 2'-0"	W/(3) 3/4 DIA.x1'-4" HEADED ANCHORS
BB2	W8x18 x 2'-6"	W/(3) 3/4 DIA.x1'-4" HEADED ANCHORS
BB3	W8x24 x 3'-0"	W/(3) 3/4 DIA.x1'-4" HEADED ANCHORS

NOTE:
REFER TO ARCHITECTURAL AND MECHANICAL DRAWINGS AND MASONRY GENERAL MASONRY NOTE SHEET S0.01 FOR LOOSE LINTEL REQUIREMENTS

LINTEL SCHEDULE

MIN. 8" BEARING (U.N.O.) EACH END SEE TYP. DETAILS 2 AND 3/S600 FOR BEARING REQUIREMENTS (TYP.)

MARK	DESCRIPTION	REMARKS
L1	2L6x3 1/2x3/8 L.L.V.	BP2 EA. END
L2	W8x13 + 1/4" PLATE	BP2 EA. END
L3	W8x18 + 1/4" PLATE	BP3 EA. END
L4	W8x24 + 1/4" PLATE	BP3 EA. END
L5	W16x31 + 1/4" PLATE	BP2 EA. END
L6	W16x40 + 1/4" PLATE	BP3 EA. END
L7	W16x50 + 1/4" PLATE	BP3 EA. END
L8	W16x67 + 1/4" PLATE	BP3 EA. END

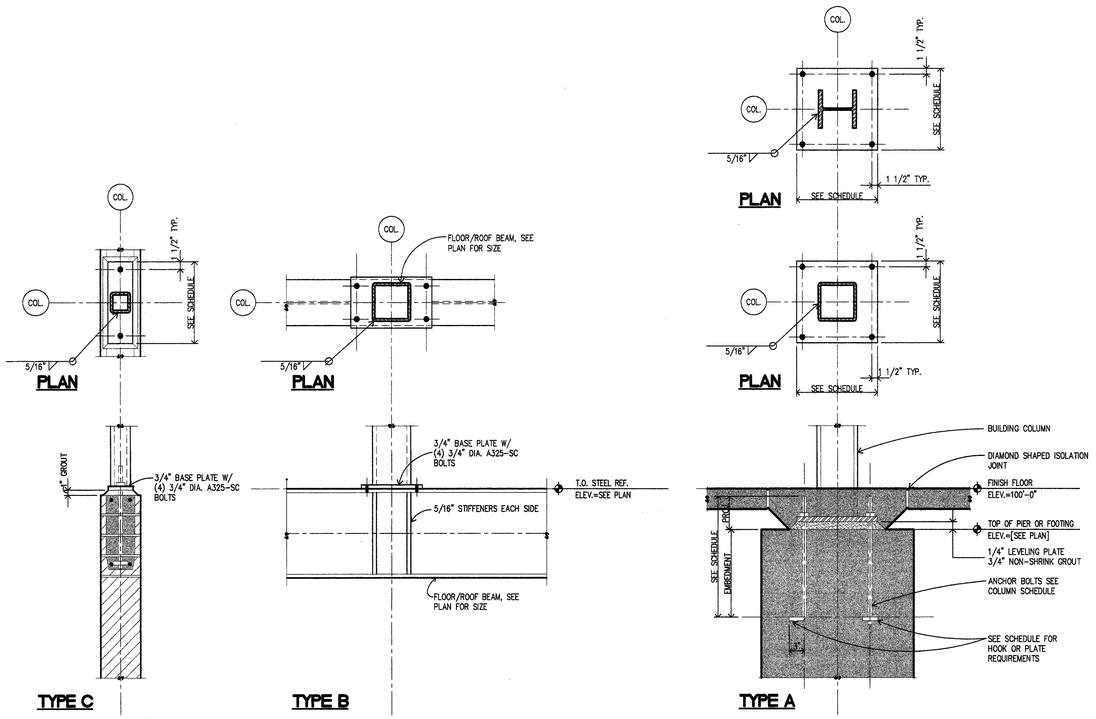

1 S600 **TYPICAL COLUMN BASE DETAILS**
SCALE: NONE

COLUMN SCHEDULE

ALL COLUMNS Fy=46 KSI (U.N.O.)

	C6	C5	C4	C3	C2	C1	COLUMN MARK
						TS3.5x1/4	MONITOR ROOF
					TS4x4x1/4		HIGH ROOF
				4" DIA.x10.79 Fy=35 ksi			LOW ROOF FUTURE THIRD
12"DIA.x65.42 Fy=35 ksi	TS4x4x1/2	TS3.5x1/4	36" DIA. CONC. f'c= 4000 psi				SECOND FLOOR
							FIRST FLOOR
98'-9"	98'-9"	98'-9"	98'-9"			84'-2"	B.O. BASE PLATE
18"x1-1/2"x1'-6"	10"x3/4"x0'-10"	10"x3/4"x0'-10"	---	3/4" PLATE	16"x3/4"x1'-4"	4"x3/4"x0'-10"	BASE PLATE
A	A	A	---		B	C	TYPE
(4) 1" DIA.x1'-9" (+3" HOOK)	(4) 3/4" DIA.x1'-9" (+3" HOOK)	(4) 3/4" DIA.x1'-9" (+3" HOOK)	8#-8 DOWELS (16" HOOK)	(4) 3/4" DIA. A325-SC BOLTS	(4) 3/4" DIA. A325-SC BOLTS	(2) 3/4" DIA.x1'-4" (NUT)	ANCHOR BOLTS
							REMARKS

NEUMANN SMITH & ASSOCIATES

Architecture
Planning
Interior Design

400 Galleria Officentre
Suite 555
Southfield, Michigan 48034

248-352-8310
FAX 248-352-1821
NS@neumannsmith.com

Metro Lofts
Royal Oak, Michigan

PENHALE & YATES, INC.
CONSULTING STRUCTURAL ENGINEERS
29200 SOUTHFIELD ROAD, SUITE 207
SOUTHFIELD MICHIGAN 48076
PH 248 569 4446 FAX 248 569 5155

Revisions

MAY 28, 2004 – ISSUED FOR BIDS

Date 5-28-2004
Drawn pm,dm
Checked pyi
Approved pyi
Bidpak Number

☐ Preliminary ■ Construction ☐ Record

Do not scale
Use figured dimensions only
Copyright © 2003

Job Number **23091**
Title **Sections and Details**

Scale: 1/8" = 1'-0"

Sheet **S600**

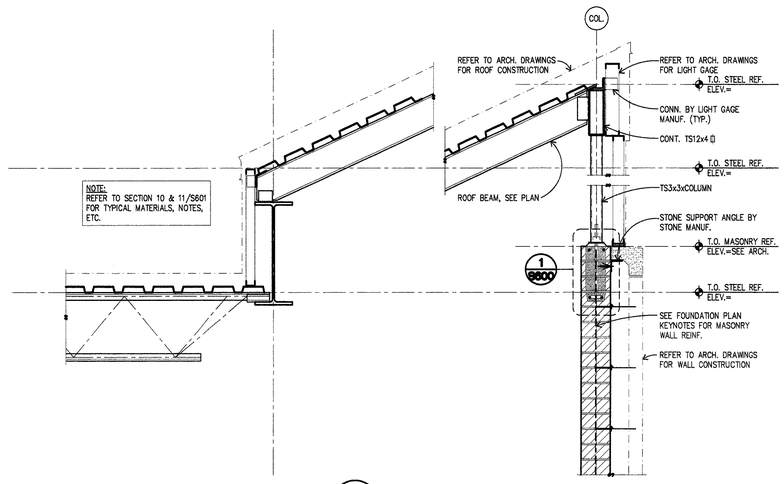

11 S601 **STRUCTURAL SECTION**
SCALE: 3/4" = 1'-0"

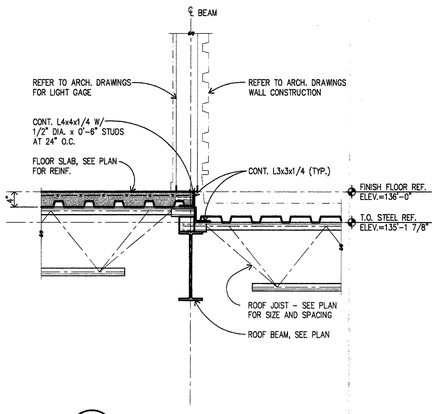

10 S601 **STRUCTURAL SECTION**
SCALE: 3/4" = 1'-0"

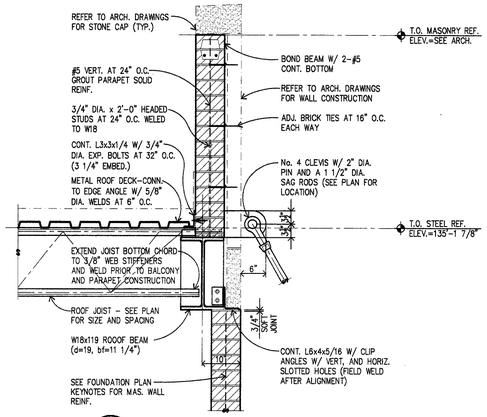

9 S601 **STRUCTURAL SECTION**
SCALE: 3/4" = 1'-0"

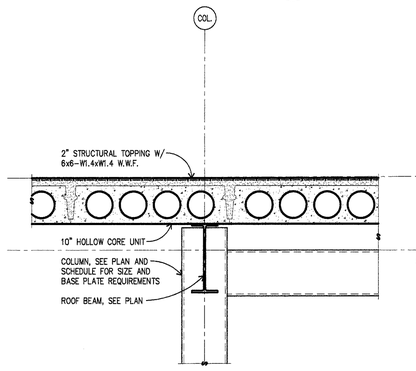

8 S601 **STRUCTURAL SECTION**
SCALE: 3/4" = 1'-0"

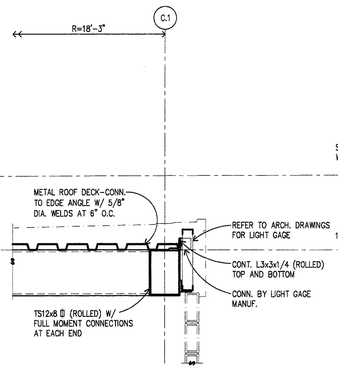

7 S601 **STRUCTURAL SECTION**
SCALE: 3/4" = 1'-0"

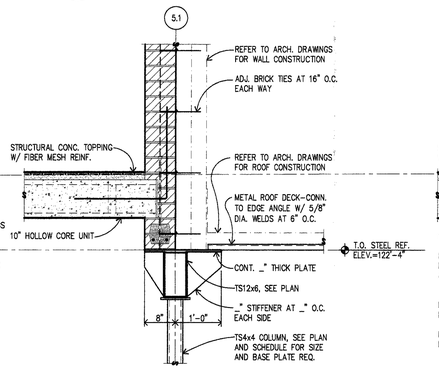

6 S601 **STRUCTURAL SECTION**
SCALE: 3/4" = 1'-0"

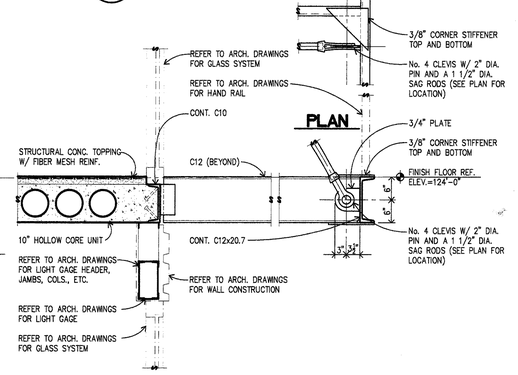

5 S601 **TYP. HOLLOW CORE BEARING**
SCALE: 3/4" = 1'-0"

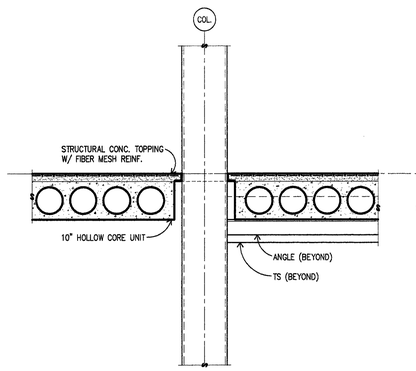

4 S601 **STRUCTURAL SECTION**
SCALE: 3/4" = 1'-0"

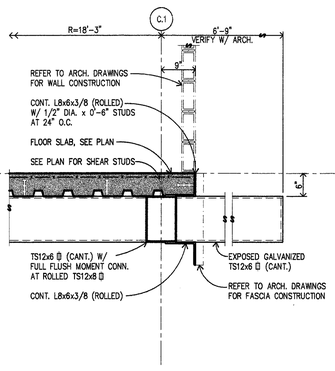

3 S601 **STRUCTURAL SECTION**
SCALE: 3/4" = 1'-0"

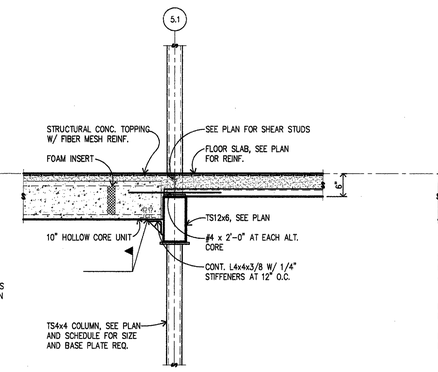

2 S601 **STRUCTURAL SECTION**
SCALE: 3/4" = 1'-0"

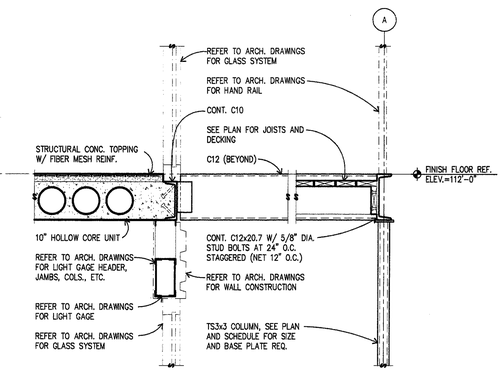

1 S601 **STRUCTURAL SECTION**
SCALE: 3/4" = 1'-0"

NEUMANN SMITH & ASSOCIATES

Architecture
Planning
Interior Design

400 Galleria Officentre
Suite 555
Southfield, Michigan 48034

248-352-8310
FAX 248-352-1821
NS@neumannsmith.com

Metro Lofts
Royal Oak, Michigan

PENHALE & YATES, INC.
CONSULTING STRUCTURAL ENGINEERS
29200 SOUTHFIELD ROAD, SUITE 207
SOUTHFIELD MICHIGAN 48076
PH 248 569 4446 FAX 248 569 5155

Revisions

Cal. 1.12.04

MAY 28, 2004 - ISSUED FOR BIDS

Date
5-28-2004
Drawn
dm
Checked
pyi
Approved

☐ Preliminary
■ Construction
☐ Record

Do not scale
Use figured dimensions only
Copyright © 2003

Bidpak Number

Job Number
23091
Title
Sections and Details

Scale: 1/8" = 1'-0"
Sheet
S601

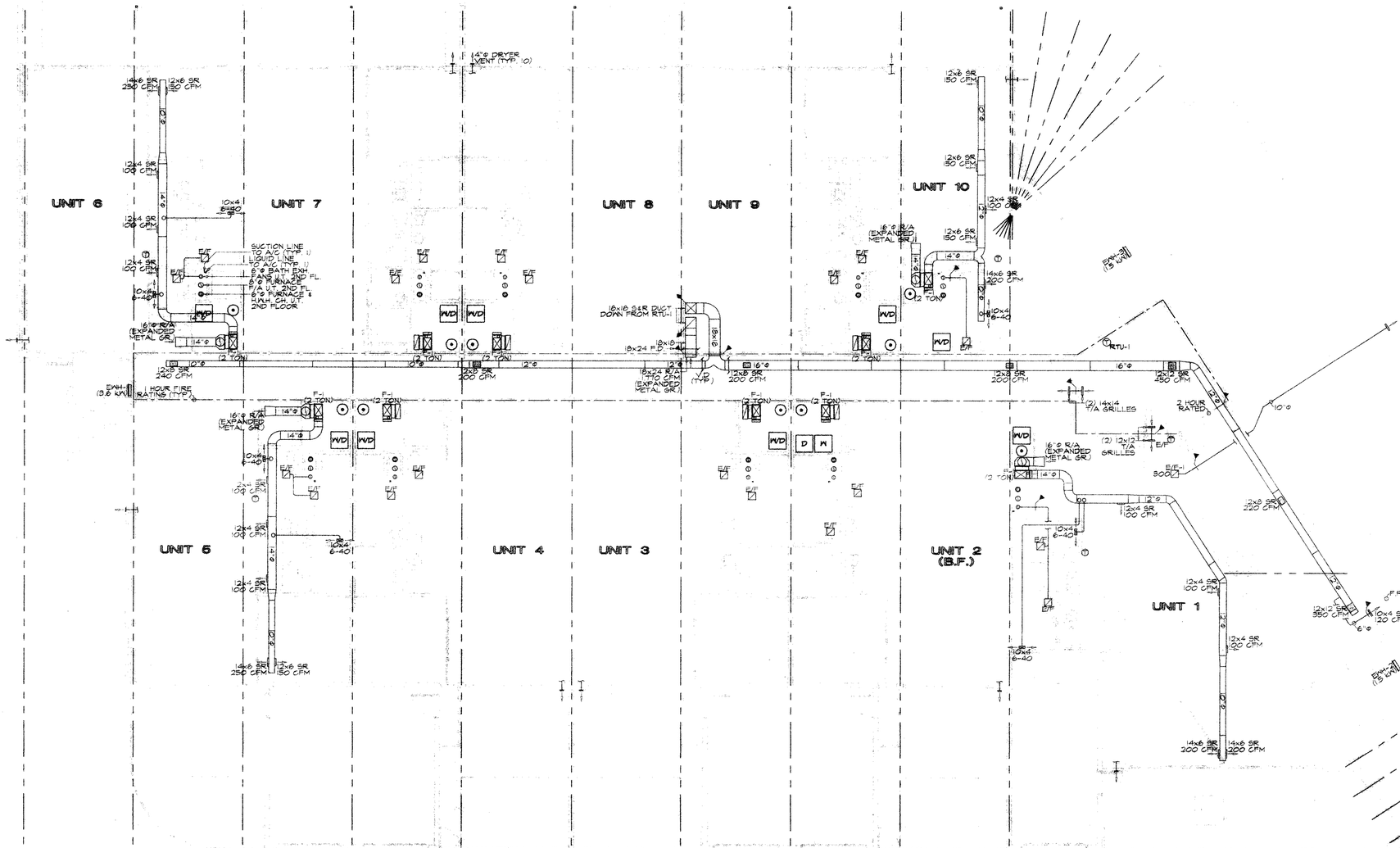

NOTE: HVAC AIR DISTRIBUTION LAYOUTS FOR UNITS 2-4 & 7-9 SIMILAR TO UNIT 5

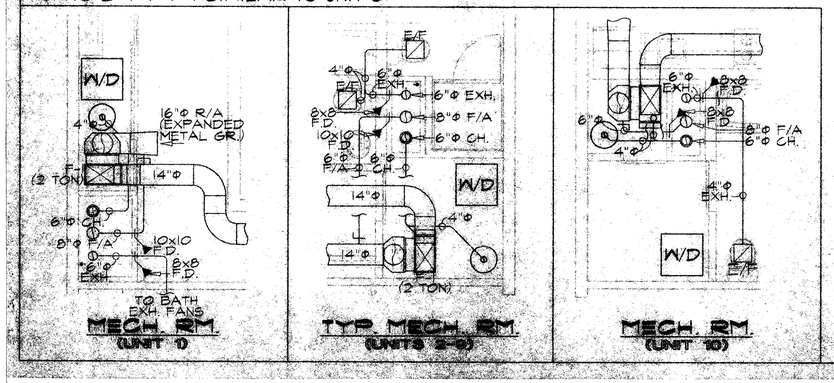

1ST FLOOR HVAC PLAN

N W E S

STATE OF MICHIGAN — DAVID M. HACKMAN — ENGINEER — No. 37708 — REGISTERED PROFESSIONAL ENGINEER

6-7-04

METROPOLITAN LOFTS
LOCATION: ROYAL OAK, MICHIGAN
CORNERSTONE BUILDING GROUP

REVISIONS:	
05.03.04	OWNER REVIEW
05.25.04	REVISIONS
06.01.04	REVISIONS

S&M HEATING SALES COMPANY
HEATING-AIR CONDITIONING SPECIALISTS
28262 TELEGRAPH RD. • SOUTHFIELD, MI 48034 • (248) 352-4656
SMENG@SMHEATING.COM • WWW.SMHEATING.COM

DRAWN BY:	APPROVED BY:	SCALE:	DRAWING NUMBER:
J.B.	D.H.	1/8"=1'-0"	HVAC-1

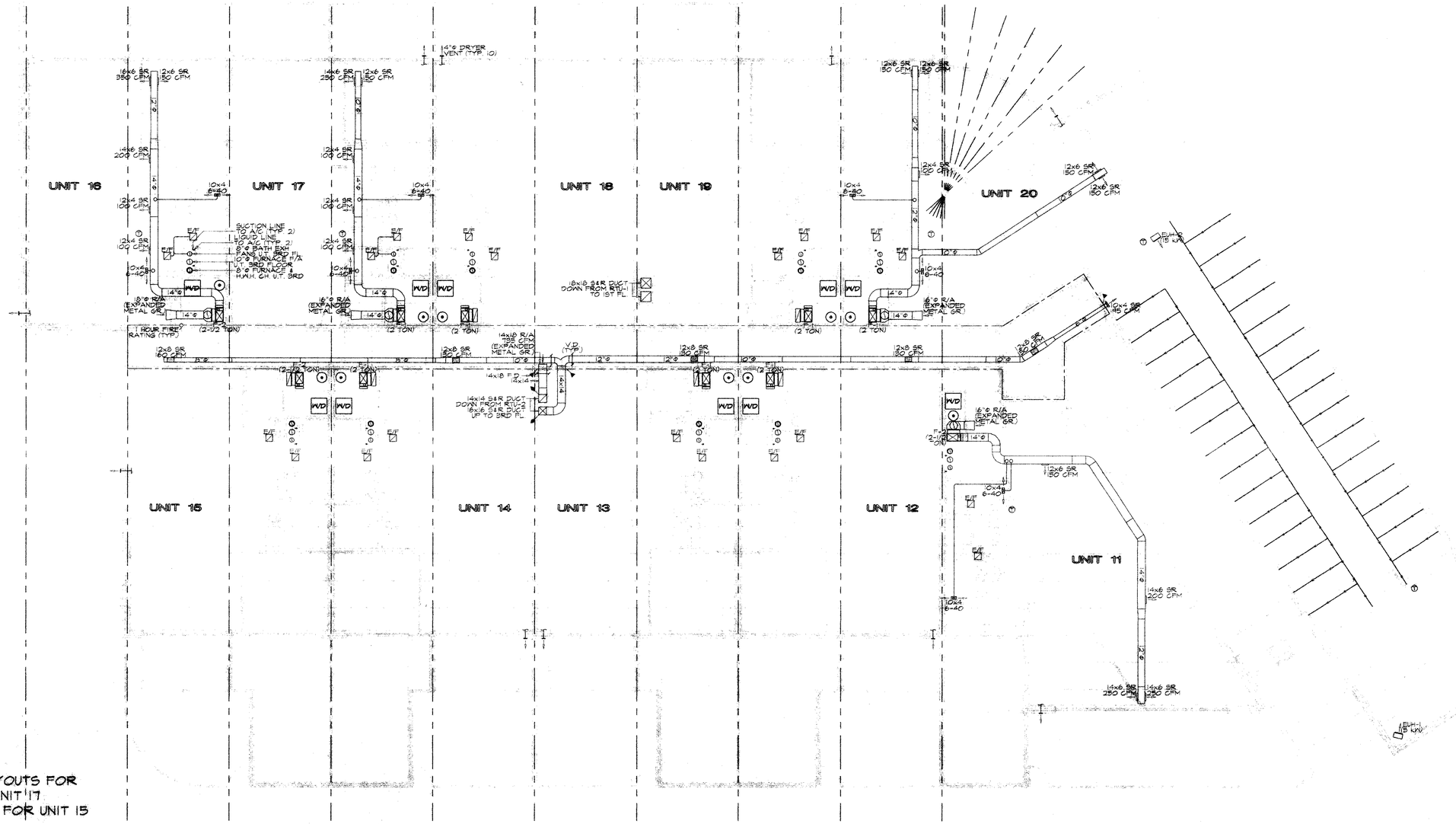

NOTE: HVAC AIR DISTRIBUTION LAYOUTS FOR UNITS 12-14 & 18-19 SIMILAR TO UNIT 17.
HVAC AIR DISTRIBUTION LAYOUTS FOR UNIT 15 SIMILAR TO UNIT 16

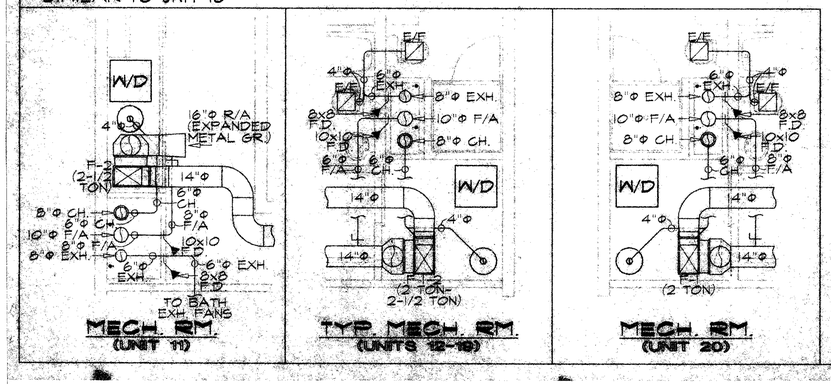

2ND FLOOR HVAC PLAN

N W E S

6-2-04

DAVID M. HACKMAN ENGINEER No. 37706 STATE OF MICHIGAN REGISTERED PROFESSIONAL ENGINEER

METROPOLITAN LOFTS
LOCATION: ROYAL OAK, MICHIGAN
CORNERSTONE BUILDING GROUP

REVISIONS:	
05.03.04	OWNER REVIEW
05.25.04	REVISIONS
06.01.04	REVISIONS

S&M HEATING SALES COMPANY
HEATING-AIR CONDITIONING SPECIALISTS
28262 TELEGRAPH RD. • SOUTHFIELD, MI 48034 • (248) 352-4656
SMENS@SMHEATING.COM • WWW.SMHEATING.COM

DRAWN BY:	APPROVED BY:	SCALE:	DRAWING NUMBER:
J.B.	D.H.	1/8"=1'-0"	HVAC-2

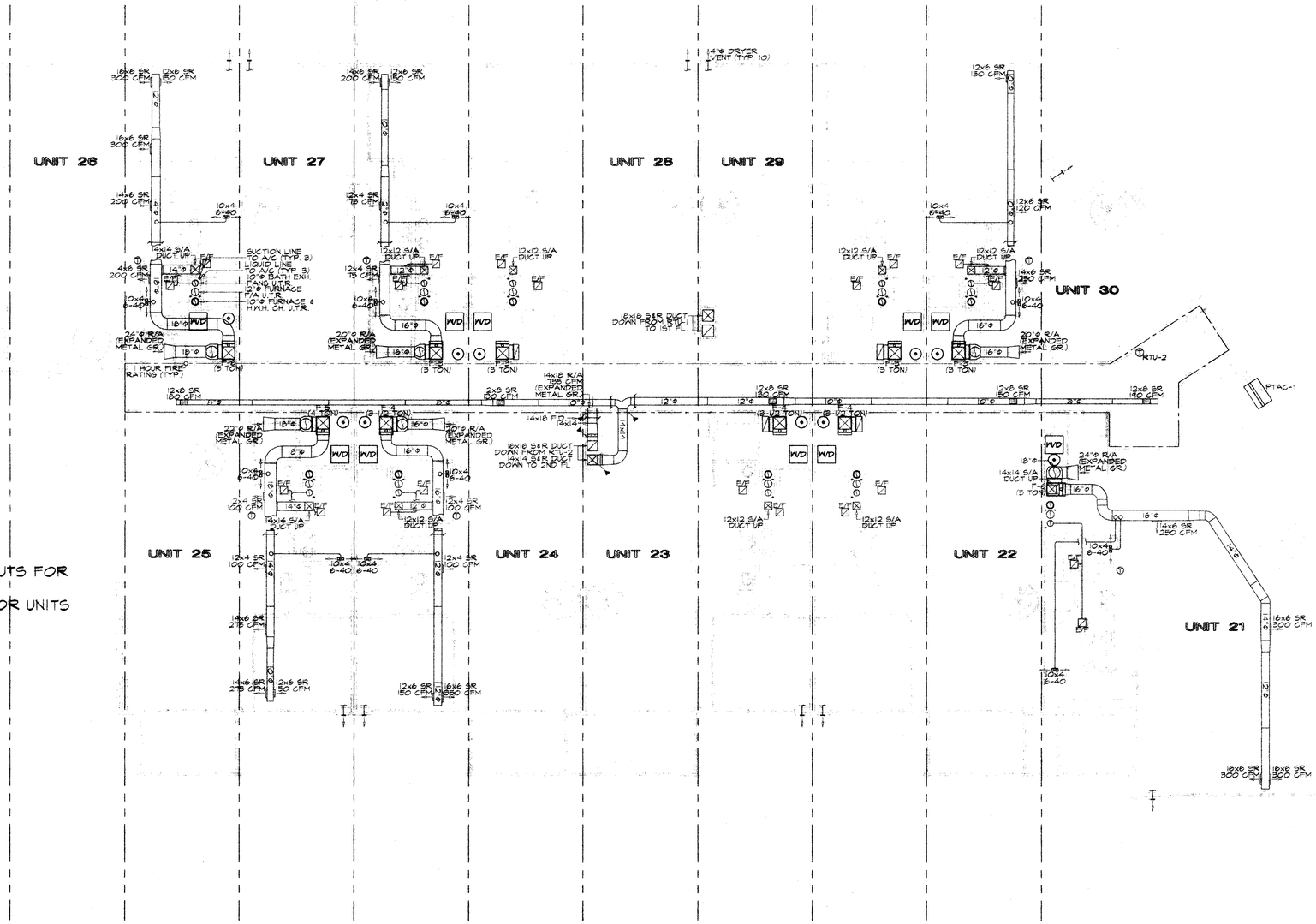

NOTE: HVAC AIR DISTRIBUTION LAYOUTS FOR UNITS 22-23 SIMILAR TO UNIT 24
HVAC AIR DISTRIBUTION LAYOUTS FOR UNITS 28-29 SIMILAR TO UNIT 27

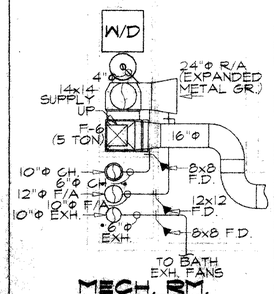

MECH. RM. (UNIT 21)

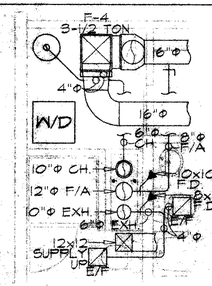

TYP. MECH. RM. (UNITS 22-24)

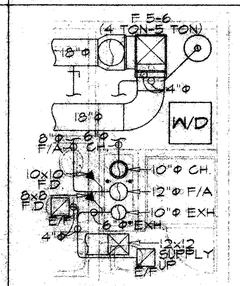

TYP. MECH. RM. (UNITS 26-26)

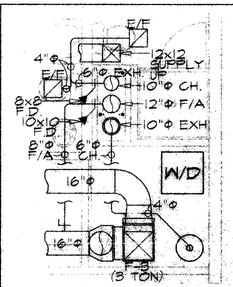

MECH. RM. (UNIT 27-30)

3RD FLOOR HVAC PLAN

N W E S

STATE OF MICHIGAN — DAVID M. JACKMAN — ENGINEER — No. 37706 — LICENSED PROFESSIONAL ENGINEER

6-3-04

METROPOLITAN LOFTS
LOCATION: ROYAL OAK, MICHIGAN
CORNERSTONE BUILDING GROUP

REVISIONS:	
05.03.04	OWNER REVIEW
05.25.04	REVISIONS
06.01.04	REVISIONS

S&M HEATING SALES COMPANY
HEATING AIR CONDITIONING SPECIALISTS
25262 TELEGRAPH RD. • SOUTHFIELD, MI 48034 • (248) 352-4656
SMENG@SMHEATING.COM • WWW.SMHEATING.COM

DRAWN BY:	APPROVED BY:	SCALE:	DRAWING NUMBER:
J.B.	D.H.	1/8"=1'-0"	HVAC-3

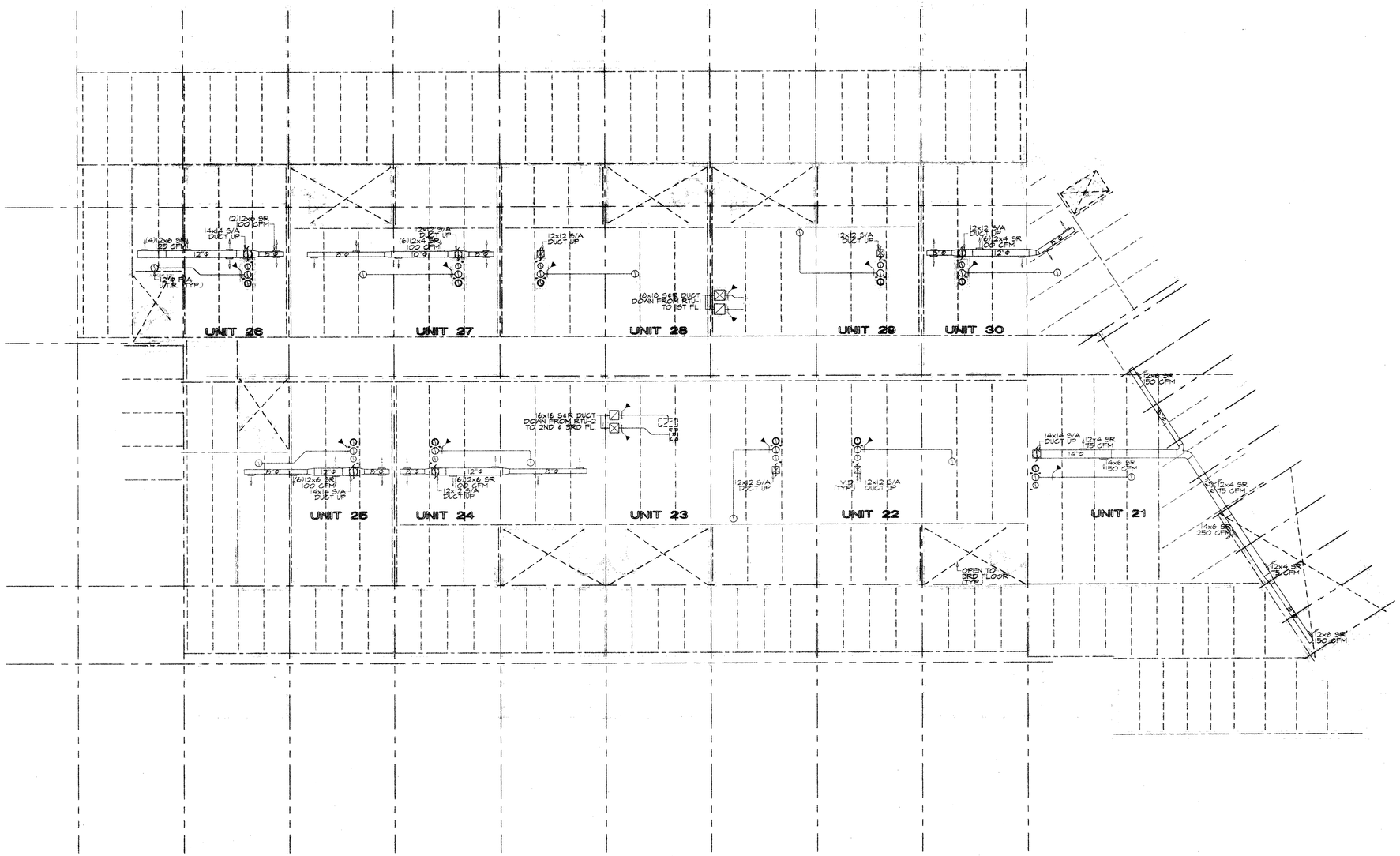

MEZZANINE HVAC PLAN

NOTE: HVAC AIR DISTRIBUTION LAYOUTS FOR UNITS 22-23 SIMILAR TO UNIT 24
HVAC AIR DISTRIBUTION LAYOUTS FOR UNITS 26-29 SIMILAR TO UNIT 27

STATE OF MICHIGAN
DAVID M. HACKMAN
ENGINEER
No. 37706
LICENSED PROFESSIONAL ENGINEER

6-1-04

METROPOLITAN LOFTS
LOCATION: ROYAL OAK, MICHIGAN

CORNERSTONE BUILDING GROUP

REVISIONS:	
05.03.04	OWNER REVIEW
05.25.04	REVISIONS
06.01.04	REVISIONS

S&M HEATING SALES COMPANY
HEATING-AIR CONDITIONING SPECIALISTS
28262 TELEGRAPH RD. • SOUTHFIELD, MI 48034 • (248) 352-4656
SMENGR@SM-HEATING.COM • WWW.SMHEATING.COM

DRAWN BY:	APPROVED BY:	SCALE:	DRAWING NUMBER:
J.B.	D.H.	1/8"=1'-0"	HVAC-4

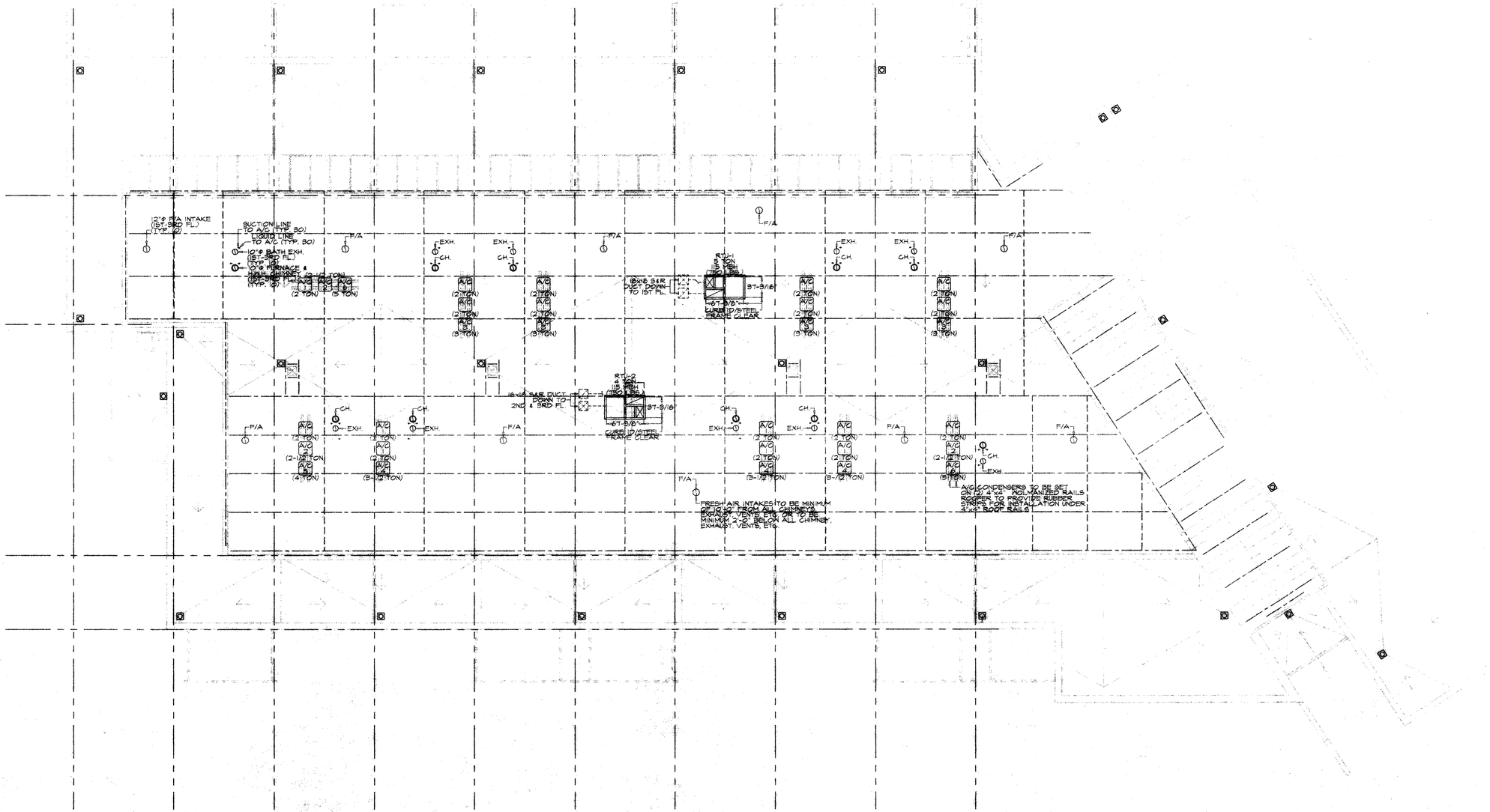

ROOF HVAC PLAN

N
W E
S

STATE OF MICHIGAN
DAVID M. HACKMAN
ENGINEER
No. 37706
LICENSED PROFESSIONAL ENGINEER

6-2-04

METROPOLITAN LOFTS
LOCATION: ROYAL OAK, MICHIGAN
CORNERSTONE BUILDING GROUP

REVISIONS:	
05.03.04	OWNER REVIEW
05.25.04	REVISIONS
06.01.04	REVISIONS

S&M HEATING SALES COMPANY
HEATING AIR CONDITIONING SPECIALISTS
29263 TELEGRAPH RD. • SOUTHFIELD, MI 48034 • (248) 352-4656
SMENGINEERING.COM • WWW.SMHEATING.COM

DRAWN BY:	APPROVED BY:	SCALE:	DRAWING NUMBER:
J.B.	D.H.	1/8"=1'-0"	HVAC-5

HVAC UNIT SCHEDULE

TAG	MANUFACTURER & MODEL #	SUPPLY CFM	MINIMUM O/A CFM	INPUT HTG. (MBH)	COOLING CAPACITY	SHIPPING WEIGHT (LBS)	ELECTRICAL				ACCESSORIES
							V / Hz / Ph.	MCA	MFS	H.P.	
RTU-1	BRYANT 580F-060	1,980	210	115 (GAS HTG)	60 (MBH)	800	208/60/3Φ	26.6	35.0	1.3	A THRU C
RTU-2	BRYANT 580F-048	1,575	105	115 (GAS HTG)	48 (MBH)	750	208/60/3Φ	25.6	30.0	1.0	A THRU C
PTAC-1	G.E. AZ35H18DB5	350	65	17 (ELEC. HTG)	14 (MBH)	125	208-230/1Φ	19.7 A / 21.7 A	-	-	D, E

NOTES AND ACCESSORIES DESIGNATION

A	UNIT TO HAVE 14" HIGH PRE-FABRICATED ROOF CURB
B	UNIT TO HAVE ECONOMIZER W/ BAROMETRIC RELIEF
C	UNIT TO HAVE PROGRAMMABLE T-STAT & SMOKE DETECTOR (TO BE UNIT MOUNTED) - R/A W/ REMOTE TEST STATION
D	UNIT TO HAVE WALL SLEEVE (42"W x 13-3/4"D x 16"H)
E	UNIT TO HAVE STAMPED ALUMINUM GRILLE, DRAIN ADAPTER KIT & SUBBASE

AIR COOLED CONDENSING UNIT SCHEDULE

TAG	MANUFACTURER & MODEL #	FURNACE # SERVED	UNIT #(S) SERVED	NOMINAL CLG. CAP. (MBH)	AMBIENT TEMP (°F)	ELECTRICAL			SUCTION LINE SIZE	LIQUID LINE SIZE	ACCESSORIES
						V / Hz / Ph.	MCA	MFS			
A/C-1	BRYANT 561CPX-024	F-1	1-10, 12-18, 17-20	24.0	95°	208/60/1Φ	15.5	20.0	3/4"	3/8"	A
A/C-2	BRYANT 561CPX-030	F-2	11, 15-16	30.0	95°	208/60/1Φ	18.4	30.0	3/4"	3/8"	A
A/C-3	BRYANT 561CPX-036	F-3	27-30	36.0	95°	208/60/1Φ	21.4	30.0	3/4"	3/8"	A
A/C-4	BRYANT 561CPX-042	F-4	22-24	42.0	95°	208/60/1Φ	27.0	40.0	7/8"	3/8"	A
A/C-5	BRYANT 561CPX-048	F-5	25	48.0	95°	208/60/1Φ	31.9	50.0	7/8"	3/8"	A
A/C-6	BRYANT 561CPX-060	F-6	21, 26	60.0	95°	208/60/1Φ	37.4	60.0	1-1/8"	3/8"	A

NOTES AND ACCESSORIES DESIGNATION

A	UNIT TO BE ROOF MOUNTED ON 4x4 NOLMONIZED LUMBER (ROOFER TO FURNISH RUBBER STIPS UNDER 4x4)

SPLIT SYSTEM INDOOR UNIT SCHEDULE

TAG	MANUFACTURER & MODEL #	UNIT #(S) SERVED	NOMINAL SUPPLY CFM	HTG. INPUT (MBH)	UNIT #/ MIN. O/A CFM		OF ESP	ELECTRICAL				ACCESSORIES
								V / Hz / Ph.	AMPS	MFS	H.P.	
F-1	BRYANT 310AAV036-070	1-10, 12-18, 17-20	800	70 (GAS HTG)	1	130	0.50"	120/60/1Φ	6.7	15.0	1/3	A THRU C
					2-9	120						
					10	85						
					12-19	120						
F-2	BRYANT 310AAV036-070	11, 15-16	1,000	70 (GAS HTG)	11	145	0.55"	120/60/1Φ	6.7	15.0	1/3	A THRU C
					15-16	120						
F-3	BRYANT 310AAV048-110	27-30	1,200	110 (GAS HTG)	27-29	175	0.60"	120/60/1Φ	10.1	15.0	1/2	A THRU C
					30	160						
F-4	BRYANT 310AAV048-110	22-24	1,400	110 (GAS HTG)	22-24	175	0.60"	120/60/1Φ	10.1	15.0	1/2	A THRU C
F-5	BRYANT 310AAV066-110	25	1,600	110 (GAS HTG)	25	160	0.60"	120/60/1Φ	13.7	20.0	3/4	A THRU C
F-6	BRYANT 310AAV066-110	21, 26	2,000	110 (GAS HTG)	21	235	0.65"	120/60/1Φ	13.7	20.0	3/4	A THRU C
					26	155						

NOTES AND ACCESSORIES DESIGNATION

A	UNIT TO BE 80.0% AFUE
B	UNIT TO HAVE THROW-AWAY FILTER
C	UNIT TO HAVE MANUAL CHANGE-OVER HEATING/COOLING T-STAT

EXHAUST FAN SCHEDULE

TAG	MANUFACTURER & MODEL #	FAN TYPE	NOMINAL CFM	ESP	ELECTRICAL		ACCESSORIES
					V / Hz / Ph.	AMPS	
E/F 1	BROAN L800	CIELING EXHAUST	250	0.50	120/60/1Φ	2.6	A THRU C
E/F (RES. UNIT BATH. EXH.)	BROAN 688	CIELING EXHAUST	50	0.25	120/60/1Φ	0.7	A, B, D, E

NOTES AND ACCESSORIES DESIGNATION

A	UNIT TO HAVE GRAVITY BACKDRAFT DAMPER
B	UNIT TO HAVE FACTORY MTD. & WIRED DISCONNECT SWITCH
C	UNIT TO HAVE 120 V COOLING T-STAT
D	UNIT TO SERVE RESIDENTIAL UNIT BATHROOMS
E	FAN TO BE FURNISHED BY ELECTRICAL TRADES

ELECTRIC HEATER SCHEDULE

TAG	MANUFACTURER & MODEL #	DESCRIPTION	ELECTRICAL		OUTPUT (kW)	ACCESSORIES
			V / Hz / Ph.	AMPS		
EUH 1	DAYTON 3UF82	ELECTRIC UNIT HEATER	208/60/3Φ	13.9	5.0 kW	A, E
EUH 2	DAYTON 3UF41	ELECTRIC UNIT HEATER	208/60/3Φ	41.6	15.0 kW	A, E
EWH 1	QMARK CWH 3504	ELECTRIC WALL HEATER	208/60/1Φ	17.3	3.6 kW	A THRU D
EWH 2-3	QMARK CWH 1202 DS	ELECTRIC WALL HEATER	208/60/1Φ	7.2	1.5 kW	A THRU D
EWH 4	QMARK CWH 3404	ELECTRIC WALL HEATER	208/60/1Φ	14.5	3.0 kW	A THRU D

NOTES AND ACCESSORIES DESIGNATION

A	UNIT TO HAVE FACTORY MTD. & WIRED DISCONNECT SWITCH
B	UNIT TO HAVE WHITE FINISH
C	UNIT TO HAVE SURFACE MOUNTING KIT
D	UNIT TO HAVE INTEGRAL T-STAT
E	UNIT TO HAVE REMOTE T-STAT

FRESH AIR:

1) PER MICHIGAN MECHANICAL CODE 2003, SEC. 403.3.

UNIT #/ AREA SERVED	REQUIRED F/A CFM	ACTUAL F/A CFM	MIN. F/A DUCT SIZE
1	128	130	8"Φ
2-9, 12-19	120	120	6"Φ
10	83	85	6"Φ
11	142	145	8"Φ
20	131	135	8"Φ
21	235	235	10"Φ
22-24, 27-29	171	175	8"Φ
25, 30	158	160	8"Φ
26	152	155	8"Φ
RTU-1 1ST FLOOR COMMON AREAS	210	210	-
RTU-2 2ND & 3RD FL. COMMON AREAS	100	105	-

COMBUSTION AIR:

1) PER INTERNATIONAL FUEL GAS CODE 2003, SECTION 304.5 (INDOOR VOLUME)

UNIT SIZE	REQUIRED C/A VOLUME	ACTUAL C/A VOLUME
784 SQ. FT.	5,500 FT.^{3}	8,674 FT.^{3}
1,131 SQ. FT.	5,500 FT.^{3}	12,441 FT.^{3}
1,296 SQ. FT.	5,500 FT.^{3}	14,256 FT.^{3}
1,478 SQ. FT.	5,500 FT.^{3}	16,260 FT.^{3}
1,681 SQ. FT.	7,500 FT.^{3}	16,810 FT.^{3}
1,791 SQ. FT.	7,500 FT.^{3}	17,910 FT.^{3}
2,001 SQ. FT.	7,500 FT.^{3}	20,010 FT.^{3}
2,914 SQ. FT.	7,500 FT.^{3}	29,140 FT.^{3}

HVAC NOTES:

1. INSTALLATION IN GENERAL TO CONFORM TO MMC 2003, AS WELL AS ALL OTHER NATIONAL, STATE, OR LOCAL CODES AND REGULATIONS.
2. R/A DUCT SMOKE DETECTORS BY HVAC TRADES (RTU 1-2), TIE-IN TO ALARM SYSTEM BY OTHER TRADES (IF REQUIRED)
3. INSTALL 1-1/2", 3/4# DENSITY FIBERGLASS WRAP INSULATION ON THE FOLLOWING:
   A. SUPPLY DUCT OF SYSTEMS RTU 1-2 (IN RATED CHASES ONLY)
   B. ALL FRESH AIR DUCT FOR UNITS 1-30
4. ALL CHIMNEYS FOR F 1-30, AND ALL H.W.H. TO BE CLASS "B" SIZED FOR MULTIPLE APPLIANCE VENTING PER INTERNATIONAL FULE GAS CODE 2003, TABLE 504.3(2)
5. INSTALL (1) BACKDRAFT DAMPER IN THE F/A INTAKE OF F 1-6 (ONE DAMPER PER MECHANICAL ROOM)

6-2-04

STATE OF MICHIGAN * DAVID M. HACKMAN ENGINEER No. 37706 * LICENSED PROFESSIONAL ENGINEER

METROPOLITAN LOFTS
LOCATION: ROYAL OAK, MICHIGAN

CORNERSTONE BUILDING GROUP

REVISIONS:	
05.03.04	OWNER REVIEW
05.25.04	REVISIONS
06.01.04	REVISIONS

S&M HEATING SALES COMPANY
HEATING AIR CONDITIONING SPECIALISTS
28262 TELEGRAPH RD. • SOUTHFIELD, MI 48034 • (248) 352-4636
SMENG@SMHEATING.COM • WWW.SMHEATING.COM

DRAWN BY:	APPROVED BY:	SCALE:	DRAWING NUMBER:
J.B.	D.H.	N.S.	HVAC-6

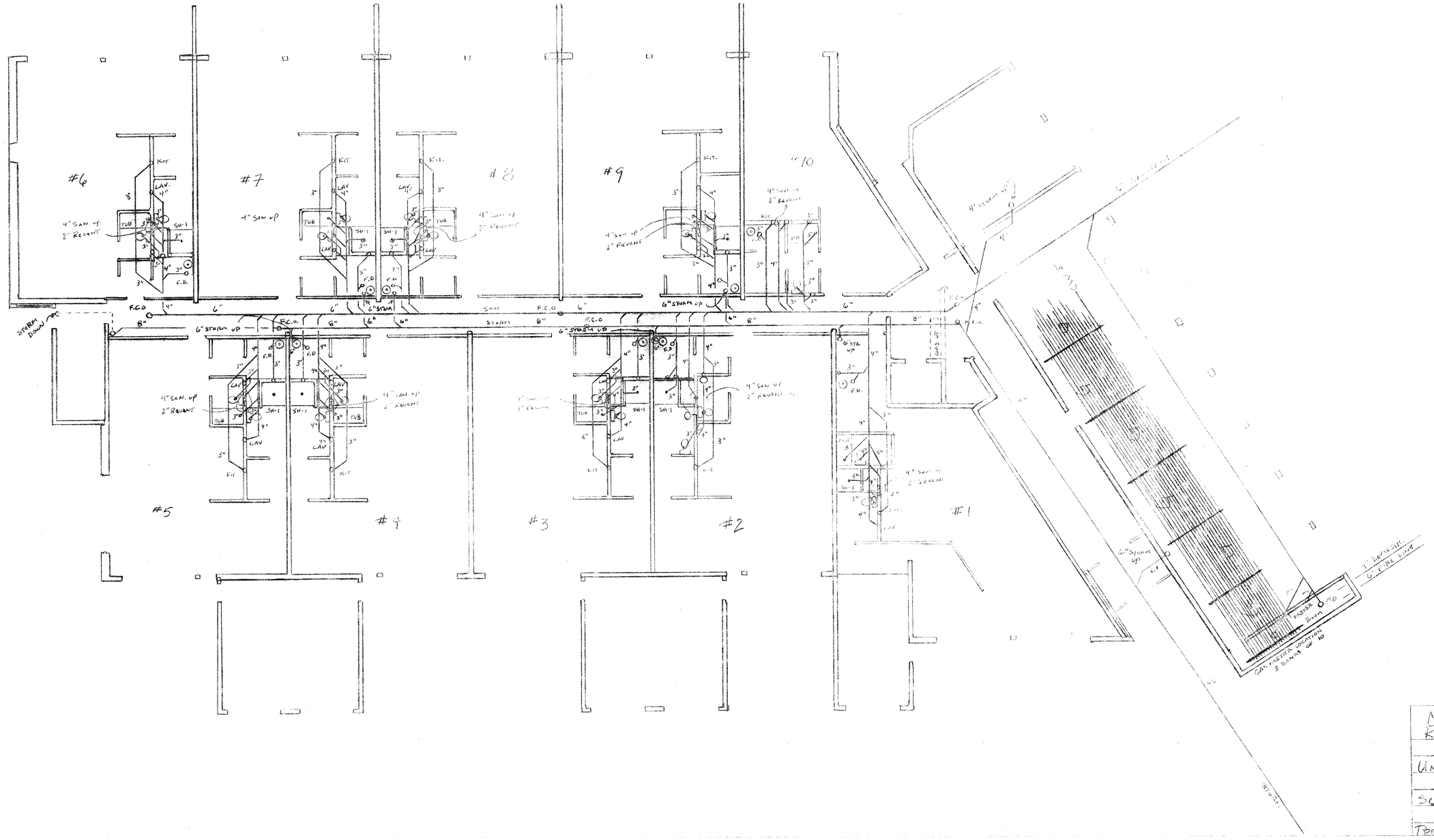

METRO LOFT
ROYAL OAK, MICHIGAN

UNDERGROUND PLUMBING
P-1

SCALE 1/8" = 1'-0"

PREMIER PLUMBING

NOTE: F.D.-1 SHALL HAVE CONE FOR CONDENSATE AND RELIEF FROM [illegible]
F.D. -1 SHALL HAVE TRAP PRIMER

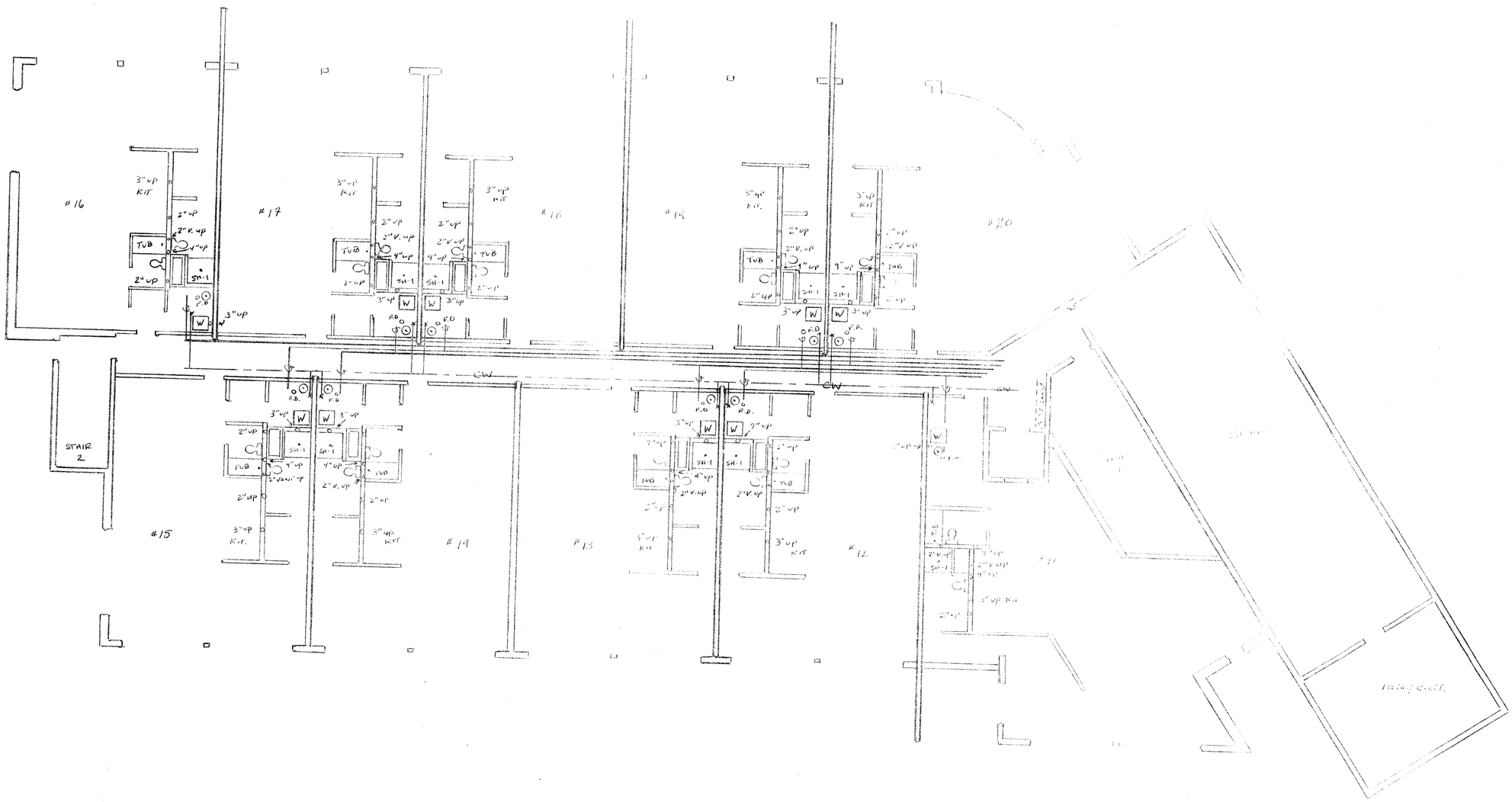
#16
#17
#18
#19
#20
#15
#14
#13
#12
STAIR 2
3"vP KIT
2"vP
2"V.vP
4"vP
TUB
SH-1
3"vP
W
F.D.
3"vP KIT.
2"vP
2"V.vP
4"vP
TUB
SH-1
3"vP
W
F.D.
3"vP KIT

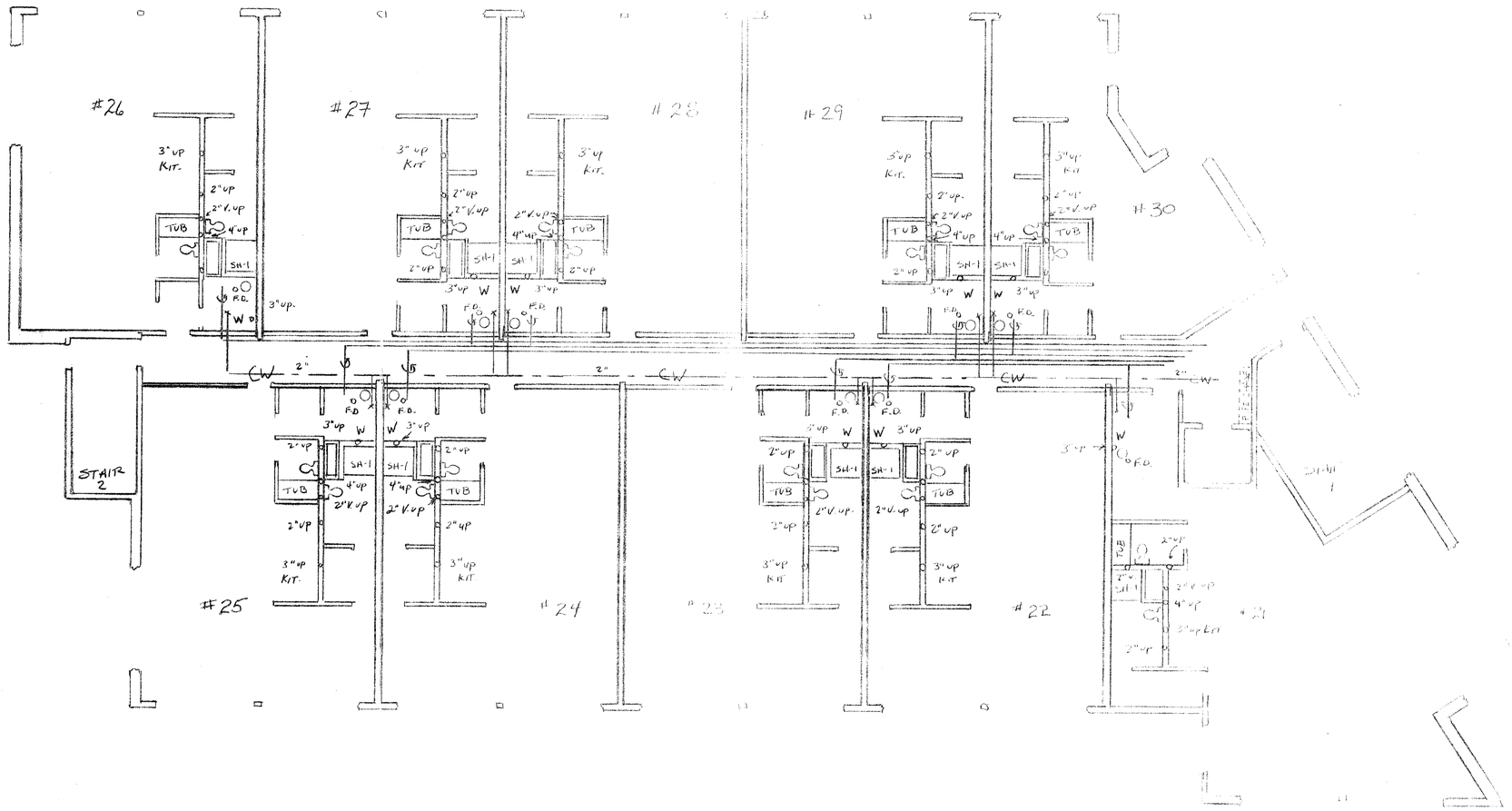

METRO LOFTS
ROYAL OAK, MICHIGAN

3RD FLOOR PLUMBING

P-3

SCALE 1/8" = 1'-0"

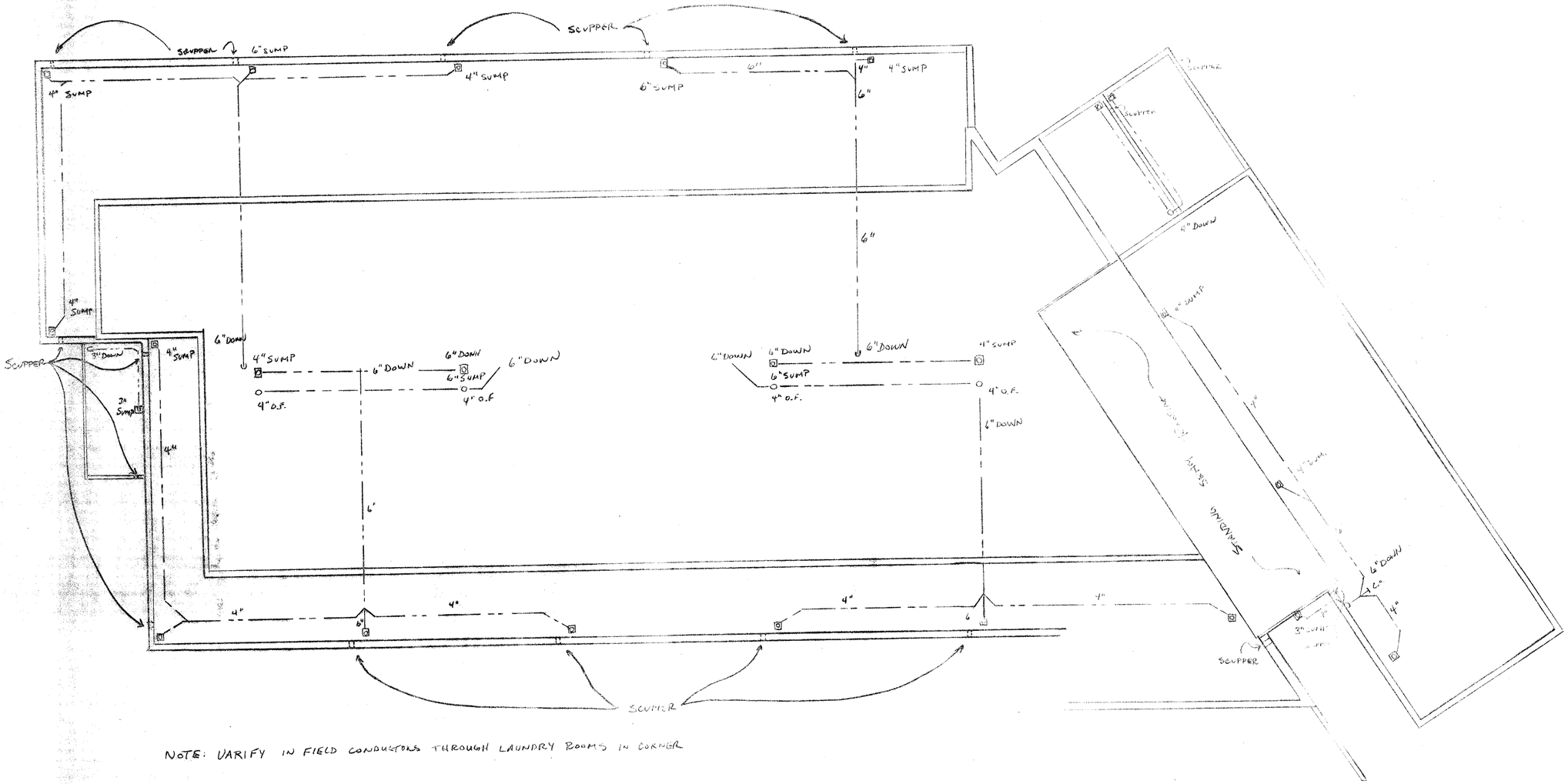

NOTE: VARIFY IN FIELD CONDUCTORS THROUGH LAUNDRY ROOMS IN CORNER

METRO LOFTS
ROYAL OAK, MICHIGAN

ROOF PLAN - TOWER
P-4
SCALE 1/8" = 0"
PREMIER PLANS

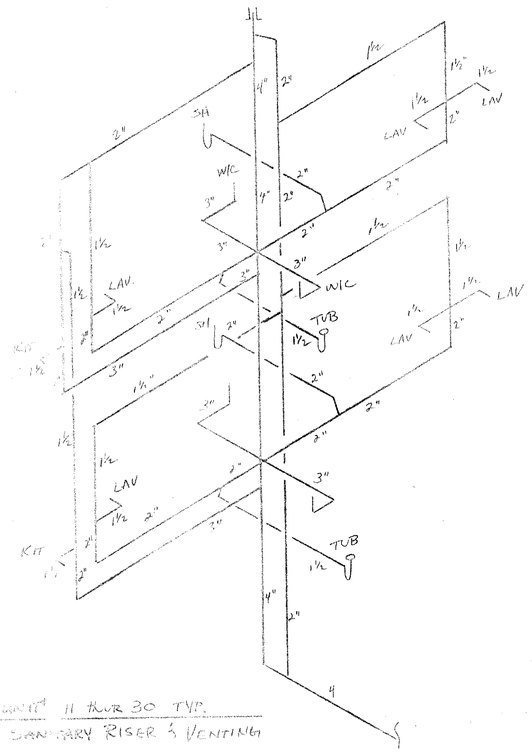

UNIT # 11 thur 30 TYP.
SANITARY RISER & VENTING

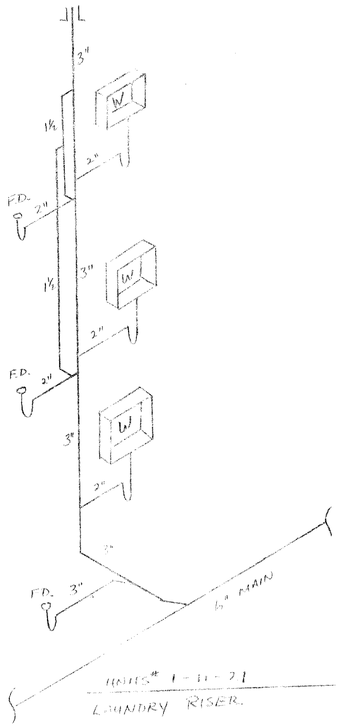

UNITS # 1 - 11 - 21
LAUNDRY RISER.

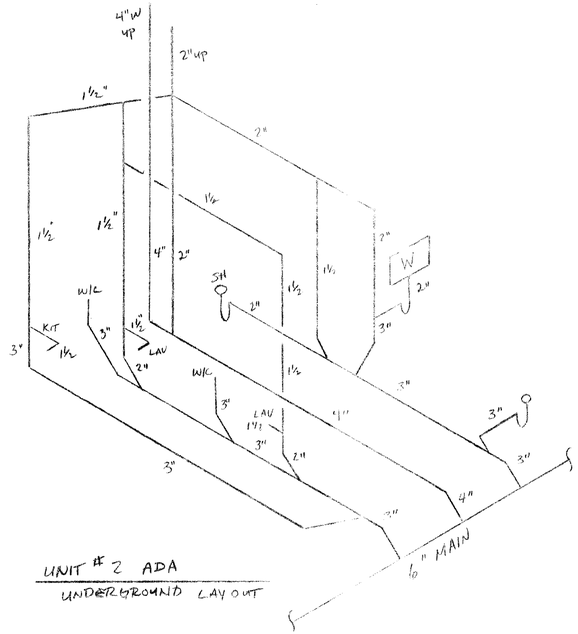

UNIT # 2 ADA
UNDERGROUND LAY OUT

DRAINAGE CALCULATIONS
SANITARY

TYPE	DFU	QTY	QTY
LAVATORY	1	87	87
WATER CLOSET (TANK)	3	59	177
BATHTUB	2	29	58
SHOWER	2	30	60
SINK	2	30	60
F.D.	2	30	60
WASHING MACHINE	2	30	60
1½ TRAP	2		
2" TRAP	3		
3" TRAP	5	2	10
TOTAL			572

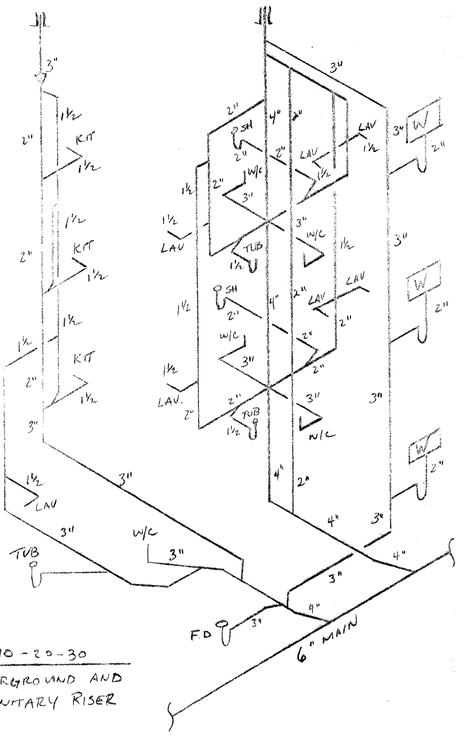

UNIT # 10 - 20 - 30
UNDERGROUND AND
SANITARY RISER

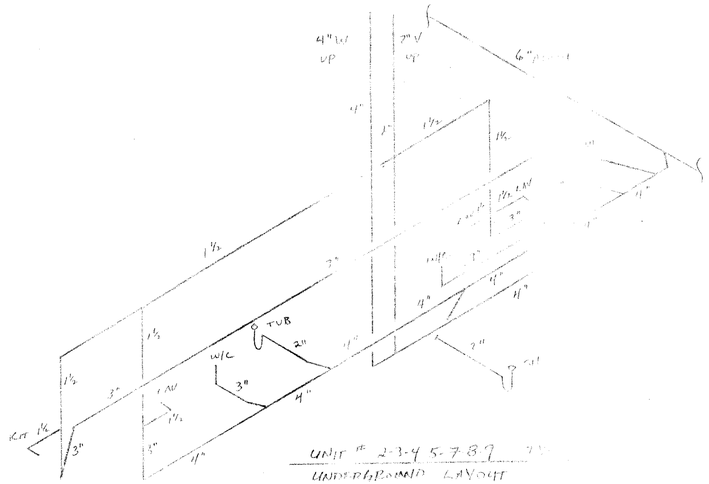

UNIT # 2-3-4-5-7-8-9
UNDERGROUND LAYOUT

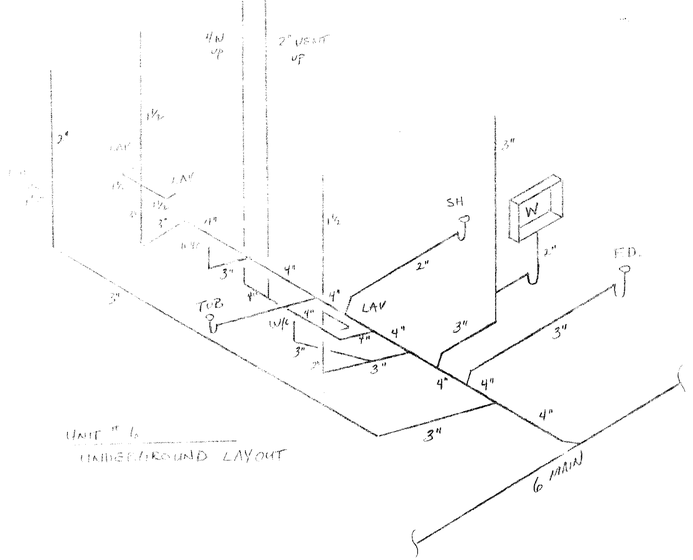

UNIT # 6
UNDERGROUND LAYOUT

METRO LOFTS
ROYAL OAK, MICHIGAN

SANITARY RISERS

P-6

SCALE 1/8" = 1'0"

PREMIER PLBG. & MECH. LLC

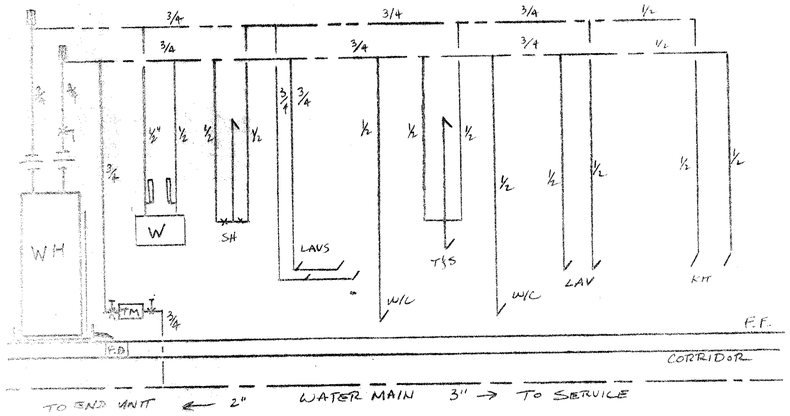

TYP. UNIT SIZING

NOTE: DRAWINGS ARE FOR REFERENCE ONLY DO NOT SCALE

WATER MAINS

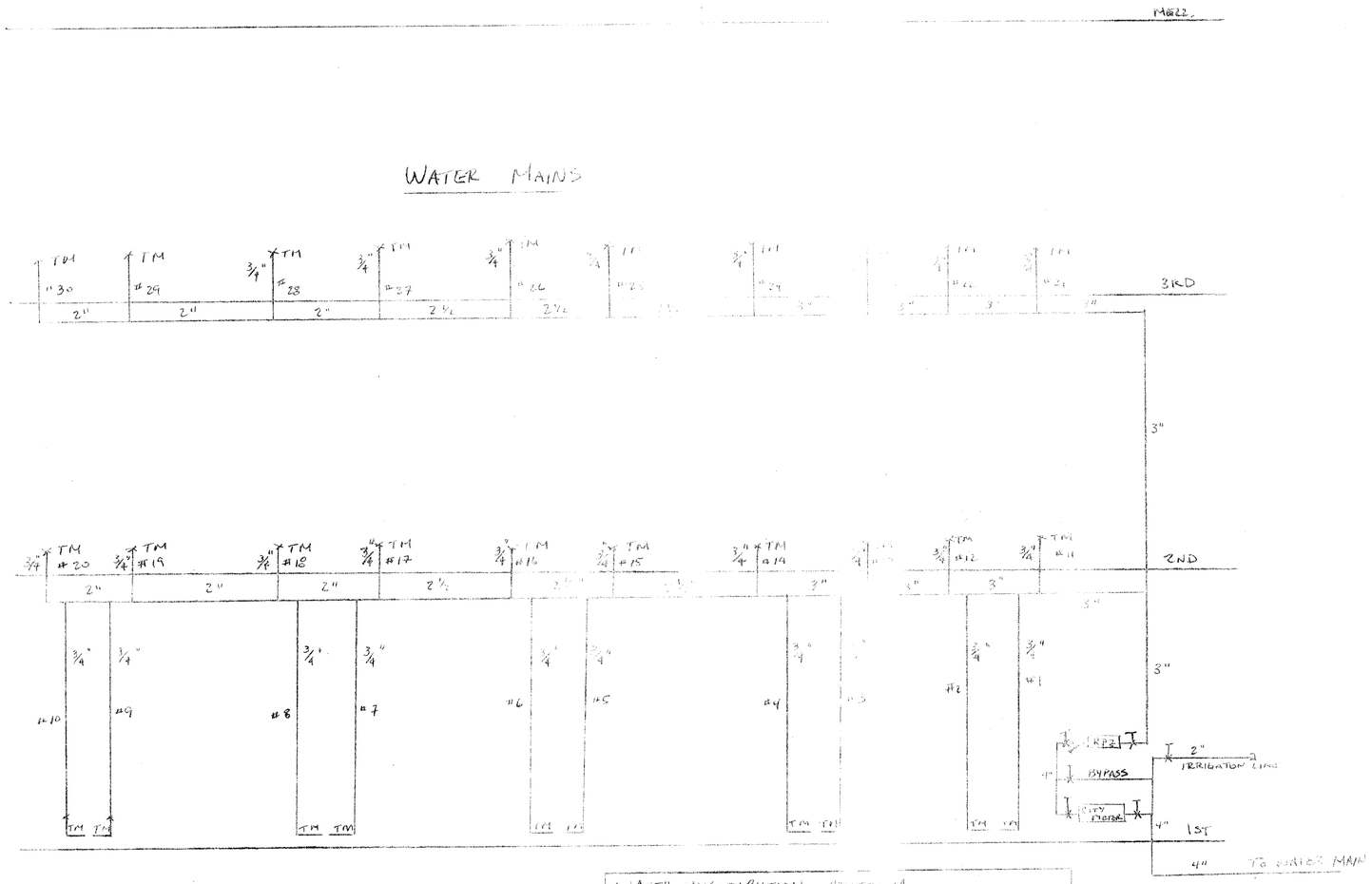

WATER DISTRIBUTION CRITERIA		
FIXTURE	FLOW RATE GPM	FLOW PRESSURE
BATHTUB	4	8
DISHWASHER	2.75	8
LAVATORY	2	8
SHOWER (TEMP. CONT)	3	20
SINK (RES.)	2.5	8
W/C (TANK TYPE)	3	8

WATER PIPE SIZING	
SINK (RES.)	1/2"
LAVATORY	3/8"
WATER CLOSET (TANK)	1/2"
BATHTUB	1/2"
SHOWER	1/2"
DISHWASHER	1/2"

METRO LOFT
ROYAL OAK
WATER P
SCALE: N/A

ELECTRICAL SYMBOL LIST

LIGHTING

XX	LIGHTING FIXTURE TYPE (REFER TO LIGHTING FIXTURE SCHEDULE)
	RECESSED OR SURFACE MOUNTED FLUORESCENT LIGHTING FIXTURE
	RECESSED OR SURFACE MOUNTED FLUORESCENT NIGHT LIGHTING FIXTURE (EM INDICATES WIRED FOR EMERGENCY OPERATION)
	SURFACE MOUNTED FLUORESCENT LIGHTING FIXTURE
	SURFACE MOUNTED FLUORESCENT NIGHT LIGHTING FIXTURE
	WALL MOUNTED FLUORESCENT LIGHTING FIXTURE
	DOWNLIGHT LIGHTING FIXTURE
	DOWNLIGHT NIGHT LIGHTING FIXTURE
	WALLWASH OR DIRECTIONAL DOWNLIGHT
	WALL MOUNTED LIGHTING FIXTURE
	WALL SCONCE
	TRACK LIGHTING TRACK
	TRACK LIGHTING FIXTURE
	EMERGENCY LIGHTING UNIT
	POLE MOUNTED LIGHTING FIXTURE
	OUTDOOR WALL MOUNTED LIGHTING FIXTURE
	EXIT LIGHTING FIXTURE WITH DIRECTIONAL ARROWS (SHADED AREA INDICATES NUMBER OF FACES)
	EXIT LIGHTING FIXTURE – WALL MOUNTED

SWITCHES/CONTROLS

S	SINGLE POLE TOGGLE SWITCH
S2	TWO POLE TOGGLE SWITCH
S3	3 WAY TOGGLE SWITCH
S4	4 WAY TOGGLE SWITCH
SK	KEY OPERATED SWITCH
S3K	3 WAY KEY OPERATED SWITCH
S4K	4 WAY KEY OPERATED SWITCH
SD	DIMMER SWITCH
S3D	3 WAY DIMMER SWITCH
SP	PILOT SWITCH
	DUAL SWITCHING FOR INNER/OUTER LAMPS OF FLUORESCENT LIGHT FIXTURES
S3D	3-WAY DUAL SWITCHING FOR INNER/OUTER LAMPS OF FLUORESCENT LIGHT FIXTURES
	OCCUPANCY SENSOR WALL SWITCH
	HORSE POWER RATED SWITCH
	TIMER CONTROLLER
	CONTACTOR
	PHOTOELECTRIC CONTROLLER
	CEILING MOUNTED OCCUPANCY SENSOR
P	OCCUPANCY SENSOR POWER PACK

SWITCHES/CONTROLS

	SINGLE RECEPTACLE
	DUPLEX RECEPTACLE
	QUAD RECEPTACLE
	DUPLEX RECEPTACLE MOUNTED 6" ABOVE COUNTER TOP (UNLESS NOTED OTHERWISE) (SIMILAR FOR ISOLATED GROUND, EMERGENCY AND GFI RECEPTACLES)
GFI	DUPLEX RECEPTACLE-GROUND FAULT INTERRUPTER
	DUPLEX ISOLATED GROUND RECEPTACLE WITH DEDICATED NEUTRAL CONDUCTOR
	QUAD ISOLATED GROUND RECEPTACLE WITH DEDICATED NEUTRAL CONDUCTOR
	DUPLEX FLOOR MOUNTED RECEPTACLE
	SPECIAL RECEPTACLE-NEMA CONFIGURATION AS NOTED
	SURFACE RACEWAY
	VERTICLE RISER FOR SURFACE RACEWAY
	LIGHTING PANEL 480/277 VOLT
	RECEPTACLE PANEL 208/120 VOLT
	DISTRIBUTION PANEL
	MOTOR CONTROL CENTER
	TRANSFORMER
	1 PHASE ELECTRIC MOTOR
	3 PHASE ELECTRIC MOTOR
	1 PHASE MANUAL MOTOR STARTER
	3 PHASE MOTOR STARTER
	1 OR 3 PHASE COMBINATION MOTOR STARTER
	1 OR 3 PHASE NON-FUSIBLE DISCONNECT SWITCH
	1 OR 3 PHASE FUSIBLE DISCONNECT SWITCH
	PUSH BUTTON STATION
	JUNCTION BOX
	HARD WIRE POWER CONNECTION
	HARD WIRE CONNECTION A/F FLOOR BOX

VOICE/VIDEO/DATA

	DATA OUTLET
	DATA OUTLET MTD 8" ABOVE COUNTERTOP
	DATA OUTLET – FLOOR MOUNTED
	COMBINATION TELE/DATA OUTLET
	COMBINATION TELE/DATA OUTLET 8" ABOVE COUNTERTOP
	COMBINATION TELE/DATA OUTLET – FLOOR MOUNTED
	TELEPHONE OUTLET
	TELEPHONE OUTLET MTD 8" ABOVE COUNTERTOP
	TELEPHONE OUTLET – FLOOR MOUNTED
	WALL MOUNTED TELEPHONE OUTLET
	TELECOMMUNICATIONS BACKBOARD
S	SPEAKER
S	SPEAKER – WALL MOUNTED
M	MICROPHONE
V	VOLUME CONTROL
TV	TELEVISION OUTLET
	SINGLE FACE CLOCK – CEILING MOUNTED
	SINGLE FACE CLOCK – WALL MOUNTED (MOUNT 7'6" AFF TO CENTER)
	DOUBLE FACE CLOCK – WALL MOUNTED
MD	MOTION DETECTOR
DC	DOOR CONTACT
KP	KEY PAD
CR	CARD READER

FIRE ALARM

F	MANUAL FIRE ALARM STATION
SD	SMOKE DETECTOR
DS	DUCT SMOKE DETECTOR
HD	THERMAL DETECTOR
	FIRE ALARM BELL
FH	FIRE ALARM HORN
FS	FIRE ALARM STROBE
FSH	FIRE ALARM HORN/STROBE
TS	TAMPER SWITCH
FS	FLOW SWITCH
DR	MAGNETIC DOOR RELEASE
FACP	FIRE ALARM CONTROL PANEL
FAA	FIRE ALARM ANNUNCIATOR PANEL

ONE-LINE DIAGRAM

	CIRCUIT BREAKER
	DRAWOUT CIRCUIT BREAKER WITH TRIP UNIT
	SWITCH
	AUTOMATIC OR MANUAL TRANSFER SWITCH
	FUSE
	TRANSFORMER
	CURRENT TRANSFORMER
	POTENTIAL TRANSFORMER
	LIGHTNING ARRESTER
	PANEL (LIGHTING OR RECEPTACLE)
	MODE
	GROUND
TVSS	TRANSIENT VOLTAGE SURGE SUPPRESSION
	NORMALLY OPEN CONTACTS
	NORMALLY CLOSED CONTACTS
	N.O. PUSH BUTTON SINGLE CIRCUIT
	N.C. PUSH BUTTON SINGLE CIRCUIT

ELECTRICAL ABBREVIATION LIST

ABBREVIATION	DESCRIPTION	ABBREVIATION	DESCRIPTION
A	AMPERE	MCB	MAIN CIRCUIT BREAKER
AFF	ABOVE FINISH FLOOR	MCC	MOTOR CONTROL CENTER
AFG	ABOVE FINISH GRADE	MDP	MAIN DISTRIBUTION PANEL
AHU	AIR HANDLING UNIT	MLO	MAIN LUGS ONLY
AIC	AMPS INTERRUPTING CAPACITY	MTD	MOUNTED
BKR	BREAKER	NC	NORMALLY CLOSED
BPS	BOLTED PRESSURE SWITCH	NF	NON-FUSIBLE
		NIC	NOT IN CONTRACT
C	CONDUIT	NL	NIGHT LIGHT
CB	CIRCUIT BREAKER	NO	NORMALLY OPEN
CKT	CIRCUIT	NTS	NOT TO SCALE
CP	CIRCULATION PUMP		
		RECEPT.	RECEPTACLE
DISC	DISCONNECT	RP	RECEPTACLE PANEL
DP	DISTRIBUTION PANEL	RTU	ROOF TOP UNIT
DWG	DRAWING		
		SD	SMOKE DETECTOR
EBU	EMERGENCY BATTERY UNIT	SPEC	SPECIFICATION
EF	EXHAUST FAN		
EM	EMERGENCY	TELCOM	TELECOMMUNICATIONS
ELH	ELECTRIC UNIT HEATER	TP	TECHNOLOGY RECEPTACLE PANEL
EWC	ELECTRIC WATER COOLER	TYP	TYPICAL
EWH	ELECTRIC WATER HEATER		
		UH	UNIT HEATER
FLA	FULL LOAD AMPS	U.O.N.	UNLESS OTHERWISE NOTED
F	FUSE		
		WP	WEATHERPROOF
GFI	GROUND FAULT INTERRUPTER		
GRD	GROUND	T-	TRANSFORMER
HOA	HAND-OFF-AUTO	(E)	EXISTING
HP	HORSEPOWER		
		(R)	RELOCATED
IG	ISOLATED GROUND		
		(N)	NEW
JB	JUNCTION BOX		
KW	KILOWATT		
KWH	KILOWATT – HOURS		
KVA	KILO VOLT-AMPERES		
LP	LIGHTING PANEL		
LO	LOCK-ON		
LRP	LIGHTING AND RECEPTACLE PANEL		

NEUMANN SMITH & ASSOCIATES

Architecture
Planning
Interior Design

400 Galleria Officentre
Suite 555
Southfield, Michigan 48034

248-352-8310
FAX 248-352-1821
NS@neumannsmith.com

Metro Lofts
Royal Oak, Michigan

Consultant

ETS ENGINEERING, INC.
ENERGY / TECHNOLOGY SOLUTIONS
418-1/2 S. WASHINGTON
P.O. BOX 1116
ROYAL OAK, MI 48068-1116

OFF: 248/744-0360
FAX: 248/744-0357

Seal

STATE OF MICHIGAN
DOUGLAS
SALES
No.
38685
REGISTERED PROFESSIONAL ENGINEER

SEAL IS VALID ONLY IF SIGNED BY THE ENGINEER NAMED.

Revisions

MAY 28, 2004 – CONSTRUCTION & PERMIT

Date
10-14-2003

Drawn
P.S.

Checked
D.S.

Approved

- [x] Preliminary
- [ ] Construction
- [ ] Record

Do not scale
Use figured dimensions only
Copyright ©

Bidpak Number

Job Number
23091

Title
Electrical Symbol List, Abbreviations And Drawing Index

Scale: 1/8" = 1'-0"

Sheet
E000

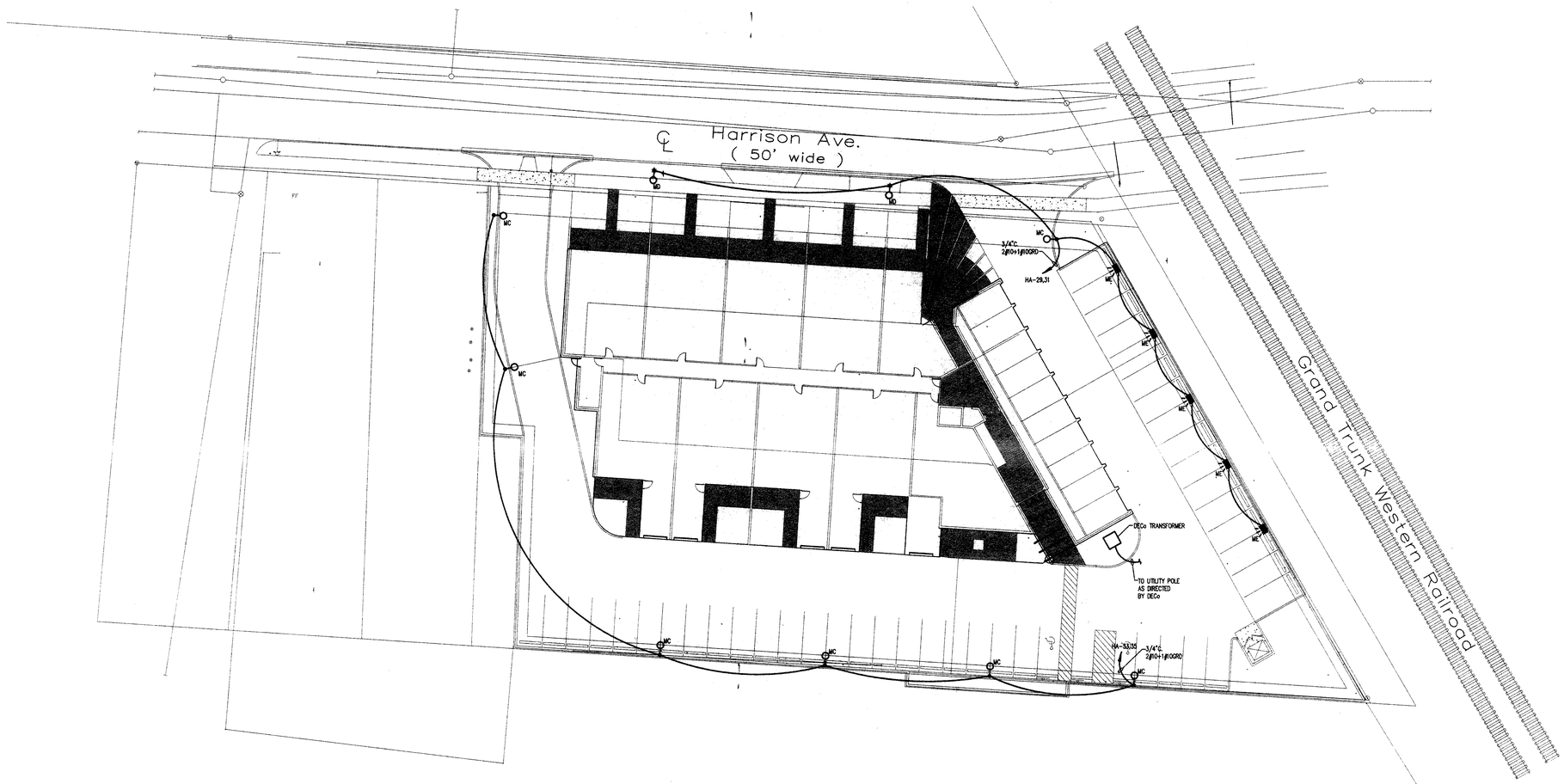

LIGHT FIXTURE SCHEDULE

TYPE	DESCRIPTION	MANUF./CAT. NO.
MC	POLE MOUNTED AREA SITE SHOEBOX, 400W METAL HALIDE LAMP, METALIC FINISH, ALUMINUM POLE ON 27'-6" 20" SQWATUBE BASE.	McGRAW-EDISON: GMA401 SERIES
MD	POLE MOUNTED ACORN STYLE LIGHT FIXTURE TO MATCH DOWNTOWN ROYAL OAK STANDARD. PURCHASED BY E.C.	
ME	WALL MOUNTED CARPORT LIGHT DIE CAST ALUMINUM HOUSING, METALIC FINISH, 100W METAL HALIDE LAMP	LUMARK: MHMP100H SERIES

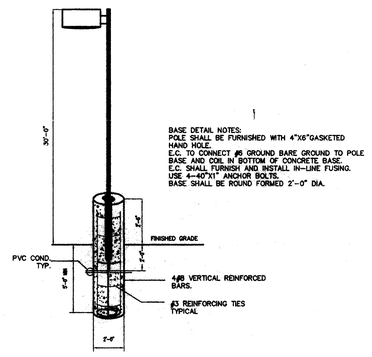

BASE DETAIL NOTES:
POLE SHALL BE FURNISHED WITH 4"X6"GASKETED HAND HOLE.
E.C. TO CONNECT #6 GROUND BARE GROUND TO POLE BASE AND COIL IN BOTTOM OF CONCRETE BASE.
E.C. SHALL FURNISH AND INSTALL IN-LINE FUSING.
USE 4-40"X1" ANCHOR BOLTS.
BASE SHALL BE ROUND FORMED 2'-0" DIA.

LIGHT POLE BASE DETAIL
N.T.S.

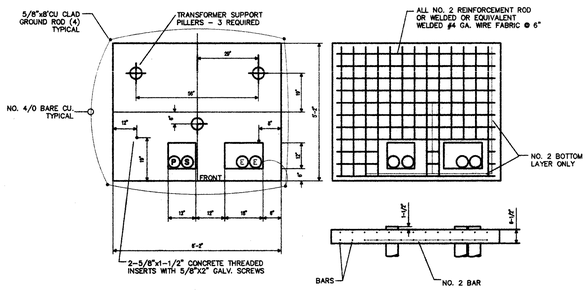

NOTES:
1. SWEEPS MUST BE 4" RIGID CONDUIT OF L.M.C. WITH A MIN. 36" RADIUS BEND.
2. CONCENTRATION 6 BAGS OF CEMENT PER YARD.
3. MAINTAIN CONCRETE COVER CLEARANCES BETWEEN REINFORCEMENT RODS AND SURFACES SHOWN.
4. CONCRETE PAD SELECTION WILL BE DETERIMINED BY DETROIT EDISON PLANNER PRIOR TO INSTALL.

TRANSFORMER PAD DETAIL
N.T.S.

NEUMANN SMITH & ASSOCIATES

Architecture
Planning
Interior Design

400 Galleria Officentre
Suite 555
Southfield, Michigan 48034

248-352-8310
FAX 248-352-1821
NS@neumannsmith.com

Metro Lofts
Royal Oak, Michigan

Consultant

ETS ENGINEERING, INC.
ENERGY / TECHNOLOGY SOLUTIONS
418-1/2 S. WASHINGTON
P.O. BOX 1116
ROYAL OAK, MI 48068-1116

OFF: 248/744-0360
FAX: 248/744-0367

Seal

STATE OF MICHIGAN
DOUGLAS P. SMITH
No. 38685
PROFESSIONAL ENGINEER

SEAL IS VALID ONLY IF SIGNED BY THE ENGINEER NAMED.

Revisions

MAY 28, 2004 - CONSTRUCTION & PERMIT

Date
10-14-2003
Drawn
P.S.
Checked
D.S.
Approved

■ Preliminary
□ Construction
□ Record

Do not scale
Use figured dimensions only
Copyright © 2003

Bidpak Number

Job Number
23091
Title
Electrical Site Plan

Scale: 1" = 20'-0"

Sheet
E100

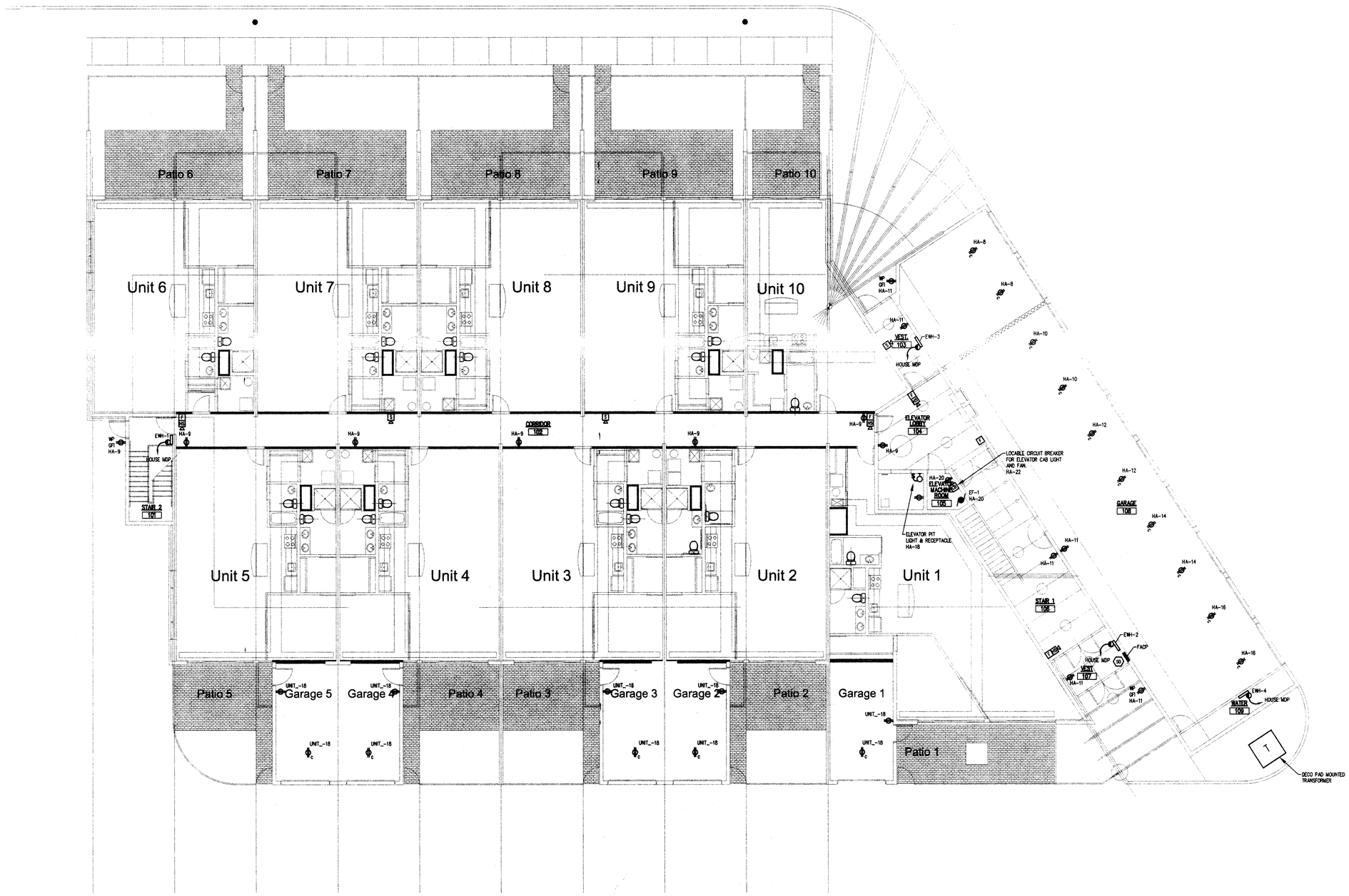

1 / A201 FIRST FLOOR POWER PLAN
1/8" = 1'-0"

NEUMANN SMITH & ASSOCIATES

Architecture
Planning
Interior Design

400 Galleria Officentre
Suite 555
Southfield, Michigan 48034

248-352-8310
FAX 248-352-1827
NS@neumannsmith.com

Metro Lofts
Royal Oak, Michigan

Consultant

ETS ENGINEERING, INC.
ENERGY / TECHNOLOGY SOLUTIONS
419 S. WASHINGTON
P.O. Box 4
ROYAL OAK, MI 48068-1116
Off: 248.744.0360
Fax: 248.744.0367

Seal

STATE OF MICHIGAN
DOUGLAS SMITH
No. 38685
REGISTERED PROFESSIONAL ENGINEER

SEAL IS VALID ONLY IF SIGNED BY THE ENGINEER NAMED.

Revisions

MAY 28, 2004 – CONSTRUCTION & PERMIT

Date
3-17-2004
Drawn
P.S.
Checked
D.S.
Approved

- [x] Preliminary
- [ ] Construction
- [ ] Record

Do not scale
Use figured dimensions only
Copyright © 2003

Bidpak Number

Job Number
23091

Title
First Floor Power Plan

Scale: 1/8" = 1'-0"

Sheet
E101

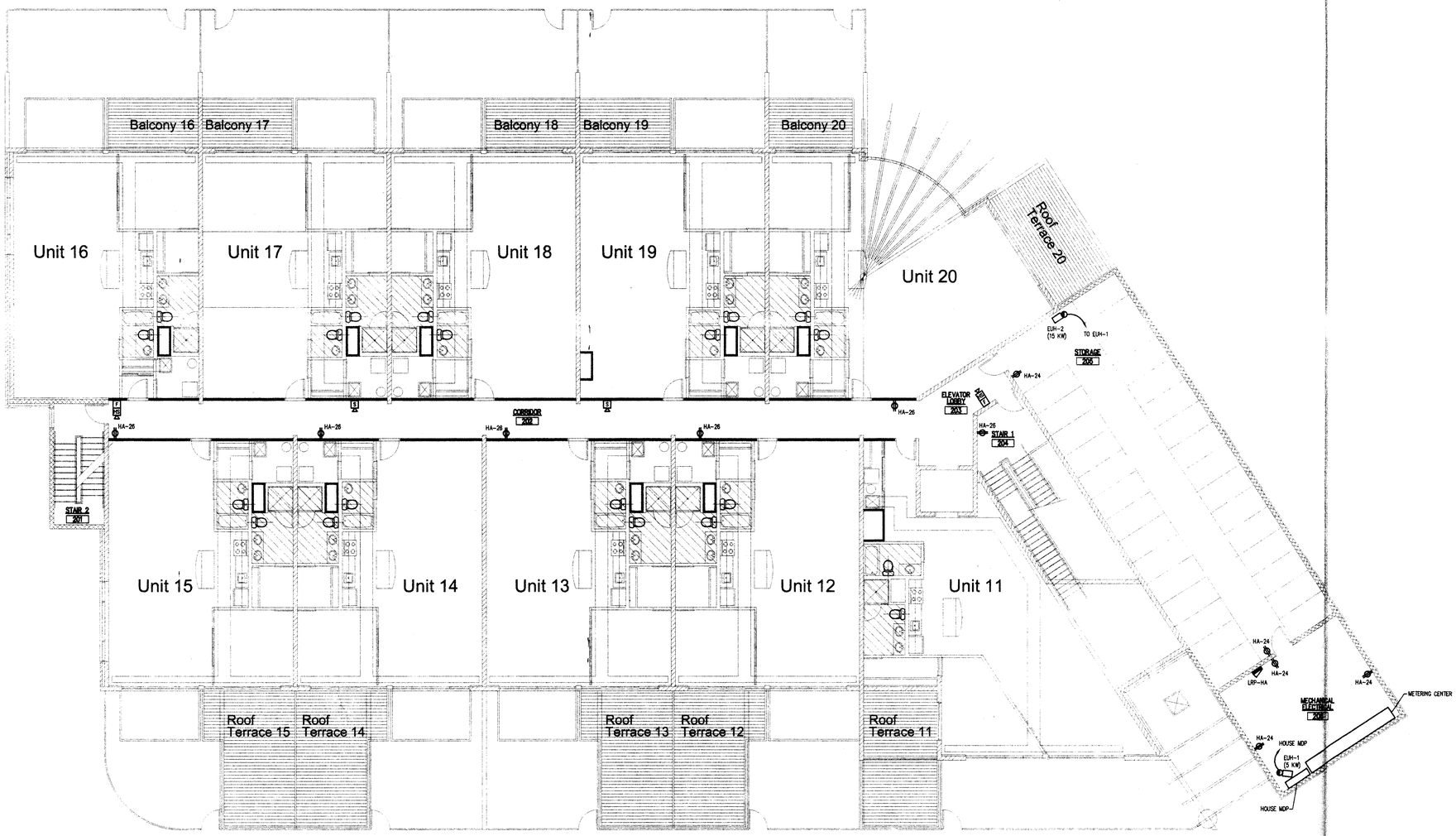

NEUMANN SMITH & ASSOCIATES

Architecture
Planning
Interior Design

400 Galleria Officentre
Suite 555
Southfield, Michigan 48034

248-352-8310
FAX 248-352-1827
NS@neumannsmith.com

Metro Lofts
Royal Oak, Michigan

Consultant

ETS ENGINEERING, INC.
ENERGY TECHNOLOGY SOLUTIONS
418 E. S. WASHINGTON
P.O. BOX 1116
ROYAL OAK, MI 48068-1116

OFF: 248/744-0360
FAX: 248 744-0367

Seal

STATE OF MICHIGAN
DOUGLAS J. SMITH
38685
REGISTERED PROFESSIONAL ENGINEER

SEAL IS VALID ONLY IF SIGNED BY THE ENGINEER NAMED.

Revisions

MAY 25, 2004 - CONSTRUCTION & PERMIT

Date
3-17-2004
Drawn
P.S.
Checked
D.S.
Approved

■ Preliminary
□ Construction
□ Record

Do not scale
Use figured dimensions only
Copyright © 2003

Bidpak Number

Job Number
23091

Title
Second Floor Power Plan

Scale: 1/8" = 1'-0"

Sheet
E102

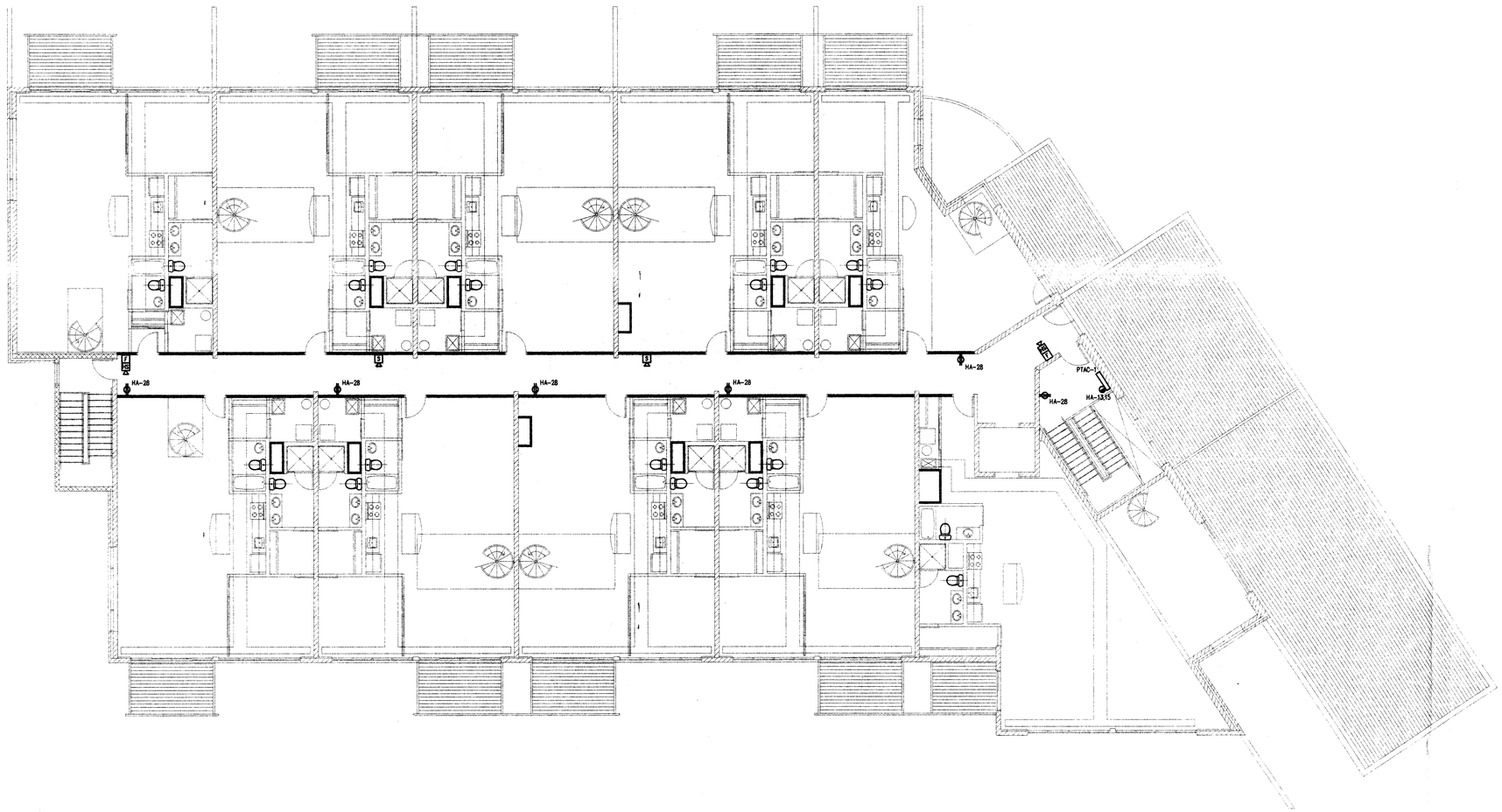

1 A201 THIRD FLOOR POWER PLAN
1/8" = 1'-0"

NEUMANN
SMITH
& ASSOCIATES

Architecture
Planning
Interior Design

400 Galleria Officentre
Suite 555
Southfield, Michigan 48034

248-352-8310
FAX 248-352-1821
NS@neumannsmith.com

Metro Lofts
Royal Oak, Michigan

Consultant

ETS ENGINEERING, INC.
ENERGY TECHNOLOGY SOLUTIONS
418-1/2 S. WASHINGTON
P.O. Box 1116
ROYAL OAK, MI 48068-1116
OFF: 248 744-0360
FAX: 248-744-0367

Seal

STATE OF MICHIGAN
DOUGLAS A. SMITH
No. 38695
REGISTERED PROFESSIONAL ENGINEER

SEAL IS VALID ONLY IF SIGNED BY THE ENGINEER NAMED.

Revisions

MAY 28, 2004 – CONSTRUCTION & PERMIT

Date
3-17-2004
Drawn
P.S.
Checked
D.S.
Approved

■ Preliminary
□ Construction
□ Record

Do not scale
Use figured dimensions only
Copyright © 2003

Bidpak Number

Job Number
23091
Title
Third Floor Power Plan

Scale: 1/8" = 1'-0"

Sheet
E103

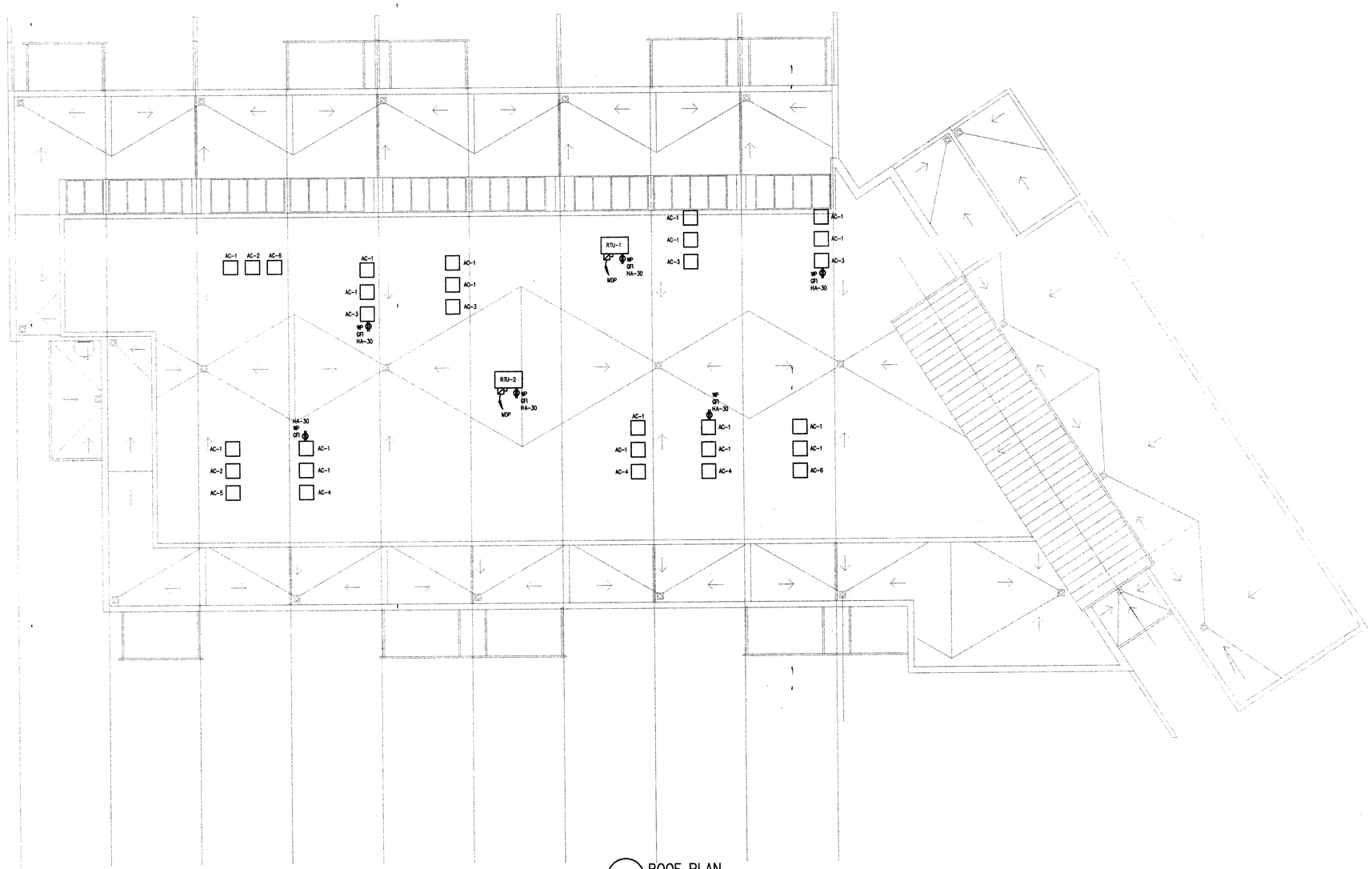

ROOF PLAN
1/8" = 1'-0"

NEUMANN
SMITH
& ASSOCIATES

Architecture
Planning
Interior Design

400 Galleria Officentre
Suite 555
Southfield, Michigan 48034

248-352-8310
FAX 248-352-1821
NS@neumannsmith.com

Metro Lofts
Royal Oak, Michigan

Consultant

ETS ENGINEERING, INC.
ENERGY / TECHNOLOGY SOLUTIONS
418-1/2 S. WASHINGTON
P.O. BOX 1116
ROYAL OAK, MI 48068-1116
OFF: 248/744-0360
FAX: 248/744-0367

Seal

STATE OF MICHIGAN
DOUGLAS
SMITH
No. 35685
REGISTERED PROFESSIONAL ENGINEER

SEAL IS VALID ONLY IF SIGNED BY THE ENGINEER NAMED.

Revisions

MAY 28, 2004 – CONSTRUCTION & PERMIT

Date
3-17-2004
Drawn
P.S.
Checked
D.S.
Approved

■ Preliminary
☐ Construction
☐ Record

Do not scale
Use figured dimensions only
Copyright © 2003

Bidpak Number

Job Number
23091
Title
ROOF PLAN

Scale: 1/8" = 1'-0"
Sheet
E104

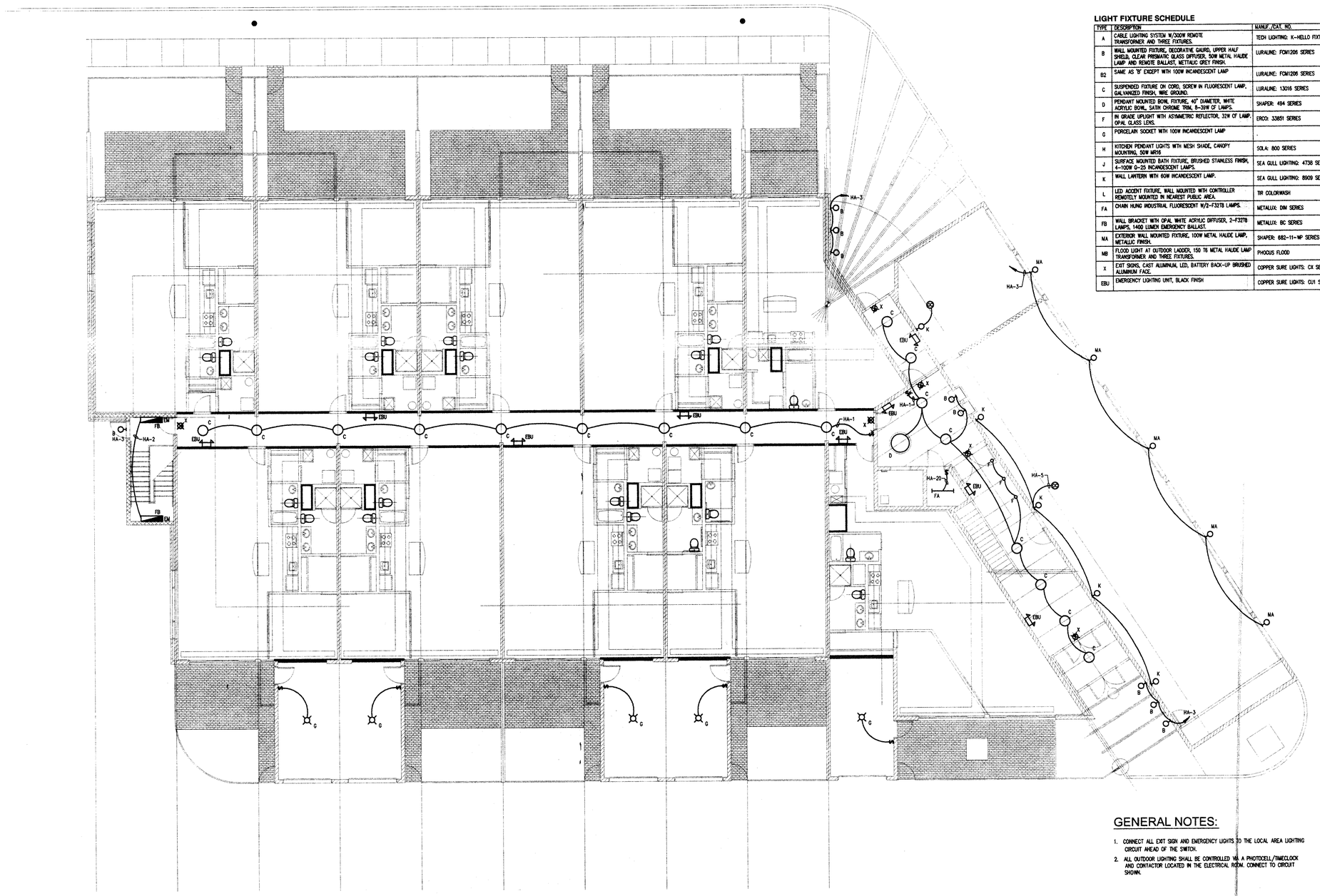

LIGHT FIXTURE SCHEDULE

TYPE	DESCRIPTION	MANUF./CAT. NO.
A	CABLE LIGHTING SYSTEM W/300W REMOTE TRANSFORMER AND THREE FIXTURES.	TECH LIGHTING: K-HELLO FIXTURES
B	WALL MOUNTED FIXTURE, DECORATIVE GAURD, UPPER HALF SHIELD, CLEAR PRISMATIC GLASS DIFFUSER, 50W METAL HALIDE LAMP AND REMOTE BALLAST, METTALIC GREY FINISH.	LURALINE: FCM1206 SERIES
B2	SAME AS 'B' EXCEPT WITH 100W INCANDESCENT LAMP	LURALINE: FCM1206 SERIES
C	SUSPENDED FIXTURE ON CORD, SCREW IN FLUORESCENT LAMP, GALVANIZED FINISH, WIRE GROUND.	LURALINE: 13016 SERIES
D	PENDANT MOUNTED BOWL FIXTURE, 40" DIAMETER, WHITE ACRYLIC BOWL, SATIN CHROME TRIM, 8-39W CF LAMPS.	SHAPER: 494 SERIES
F	IN GRADE UPLIGHT WITH ASYMMETRIC REFLECTOR, 32W CF LAMP. OPAL GLASS LENS.	ERCO: 33851 SERIES
G	PORCELAIN SOCKET WITH 100W INCANDESCENT LAMP	.
H	KITCHEN PENDANT LIGHTS WITH MESH SHADE, CANOPY MOUNTING, 50W MR16	SOLA: 800 SERIES
J	SURFACE MOUNTED BATH FIXTURE, BRUSHED STAINLESS FINISH, 4-100W G-25 INCANDESCENT LAMPS.	SEA GULL LIGHTING: 4738 SERIES
K	WALL LANTERN WITH 60W INCANDESCENT LAMP.	SEA GULL LIGHTING: 8909 SERIES
L	LED ACCENT FIXTURE, WALL MOUNTED WITH CONTROLLER REMOTELY MOUNTED IN NEAREST PUBLIC AREA.	TIR COLORWASH
FA	CHAIN HUNG INDUSTRIAL FLUORESCENT W/2-F32T8 LAMPS.	METALUX: DIM SERIES
FB	WALL BRACKET WITH OPAL WHITE ACRYLIC DIFFUSER, 2-F32T8 LAMPS, 1400 LUMEN EMERGENCY BALLAST.	METALUX: BC SERIES
MA	EXTERIOR WALL MOUNTED FIXTURE, 100W METAL HALIDE LAMP, METALLIC FINISH.	SHAPER: 682-11-WP SERIES
MB	FLOOD LIGHT AT OUTDOOR LADDER, 150 T6 METAL HALIDE LAMP TRANSFORMER AND THREE FIXTURES.	PHOCUS FLOOD
X	EXIT SIGNS, CAST ALUMINUM, LED, BATTERY BACK-UP BRUSHED ALUMINUM FACE.	COPPER SURE LIGHTS: CX SERIES
EBU	EMERGENCY LIGHTING UNIT, BLACK FINISH	COPPER SURE LIGHTS: CU1 SERIES

GENERAL NOTES:

1. CONNECT ALL EXIT SIGN AND EMERGENCY LIGHTS TO THE LOCAL AREA LIGHTING CIRCUIT AHEAD OF THE SWITCH.
2. ALL OUTDOOR LIGHTING SHALL BE CONTROLLED VIA A PHOTOCELL/TIMECLOCK AND CONTACTOR LOCATED IN THE ELECTRICAL ROOM. CONNECT TO CIRCUIT SHOWN.

1 / A201 FIRST LIGHTING FLOOR PLAN
1/8" = 1'-0"

NEUMANN
SMITH
& ASSOCIATES

Architecture
Planning
Interior Design

400 Galleria Officentre
Suite 555
Southfield, Michigan 48034

248-352-8310
FAX 248-352-1821
NS@neumannsmith.com

Metro Lofts
Royal Oak, Michigan

Consultant

ETS ENGINEERING, INC.
ENERGY / TECHNOLOGY SOLUTIONS
418-1 2 S. WASHINGTON
P.O. BOX 1116
ROYAL OAK, MI 48068-1116

OFF: 248-744-0360
FAX: 248-744-0367

Seal

STATE OF MICHIGAN
DOUGLAS M. SAMES
No. 38685
LICENSED PROFESSIONAL ENGINEER

SEAL IS VALID ONLY IF SIGNED BY THE ENGINEER NAMED.

Revisions

MAY 28, 2004 - CONSTRUCTION & PERMIT

Date
3-17-2004
Drawn
P.S.
Checked
D.S.
Approved

■ Preliminary
☐ Construction
☐ Record

Do not scale
Use figured dimensions only
Copyright © 2003

Bidpak Number

Job Number
23091

Title
First Floor Lighting Plan

Scale: 1/8" = 1'-0"

Sheet
E201

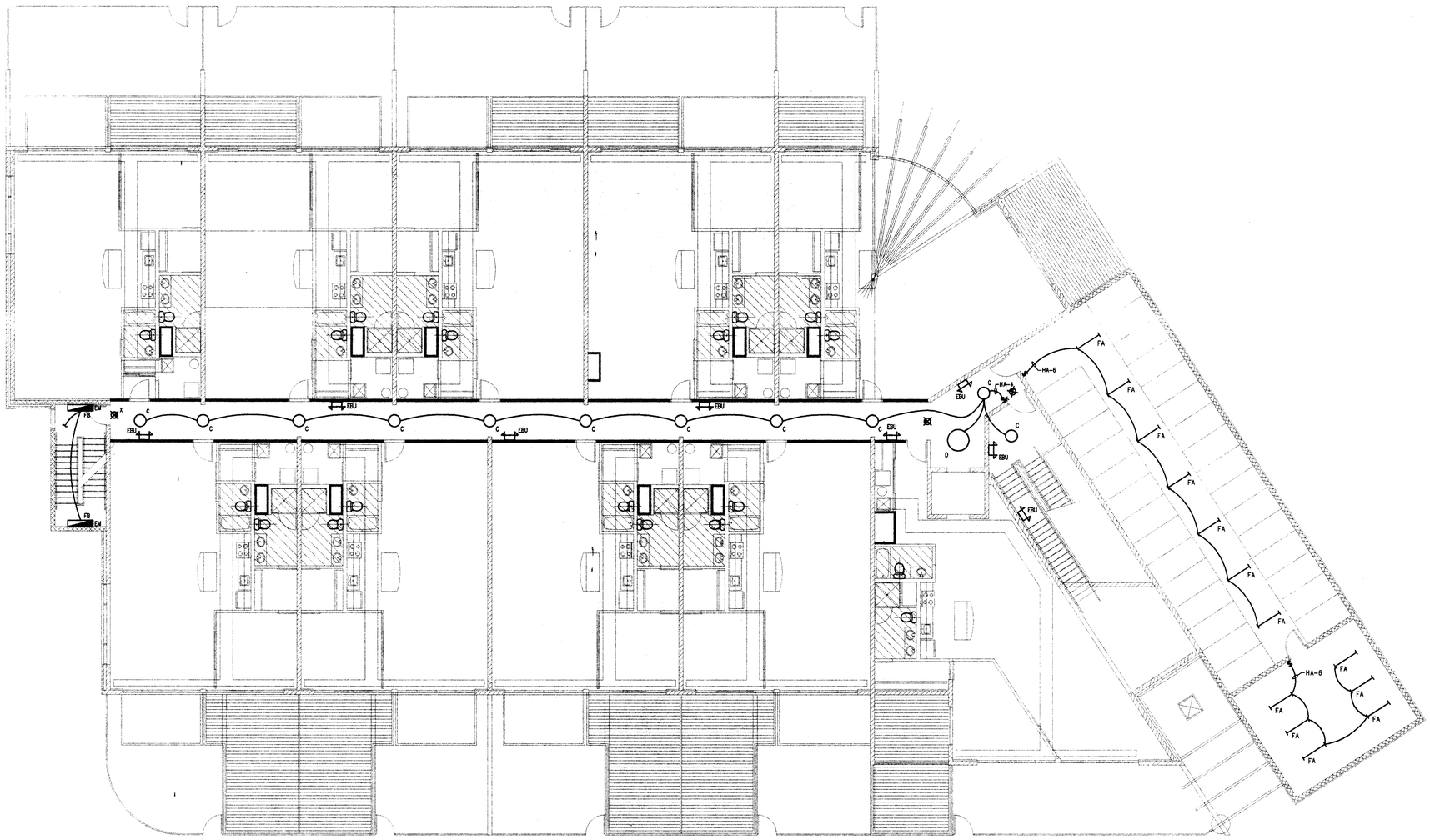

1 A201 SECOND FLOOR LIGHITNG PLAN
1/8" = 1'-0"

GENERAL NOTES:

1. CONNECT ALL EXIT SIGN AND EMERGENCY LIGHTS TO THE LOCAL AREA LIGHTING CIRCUIT AHEAD OF THE SWITCH.
2. ALL OUTDOOR LIGHTING SHALL BE CONTROLLED VIA A PHOTOCELL/TIMECLOCK AND CONTACTOR LOCATED IN THE ELECTRICAL ROOM. CONNECT TO CIRCUIT SHOWN.

NEUMANN
SMITH
& ASSOCIATES

Architecture
Planning
Interior Design

400 Galleria Officentre
Suite 555
Southfield, Michigan 48034

248-352-8310
FAX 248-352-1821
NS@neumannsmith.com

Metro Lofts
Royal Oak, Michigan

Consultant

ETS ENGINEERING, INC.
ENERGY / TECHNOLOGY SOLUTIONS
418-1/2 S. WASHINGTON
P.O. BOX 1116
ROYAL OAK, MI 48068-1116
OFF: 248/744-0350
FAX: 248/744-0367

Seal

STATE OF MICHIGAN
DOUGLAS M. SAYLES
No. 38685
LICENSED PROFESSIONAL ENGINEER

SEAL IS VALID ONLY IF SIGNED BY THE ENGINEER NAMED.

Revisions

MAY 28, 2004 – CONSTRUCTION & PERMIT

Date
3-17-2004
Drawn
P.S.
Checked
D.S.
Approved

■ Preliminary
☐ Construction
☐ Record

Do not scale
Use figured dimensions only
Copyright © 2003

Bidpak Number

Job Number
23091

Title
Second Floor Lighting Plan

Scale: 1/8" = 1'-0"

Sheet
E202

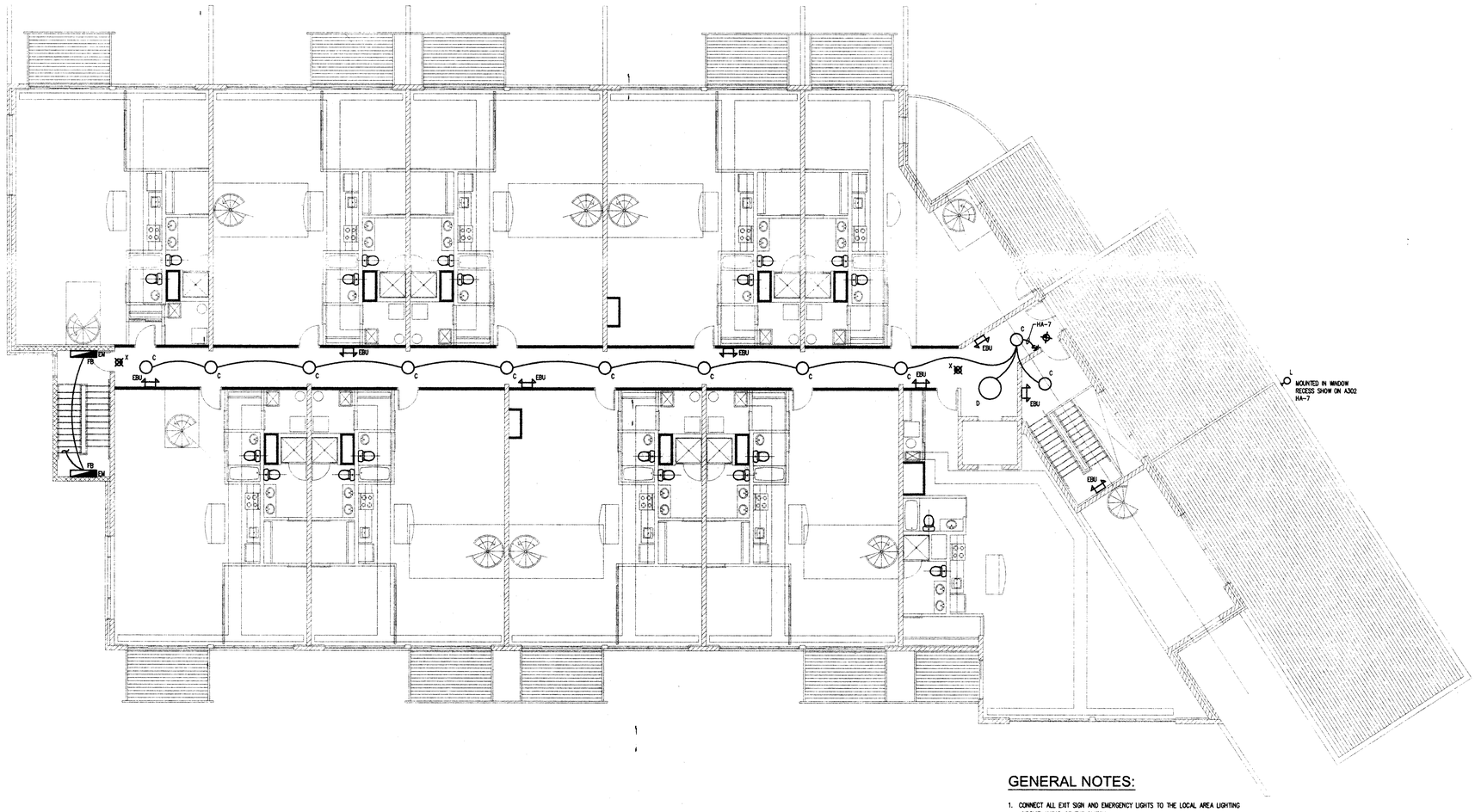

GENERAL NOTES:

1. CONNECT ALL EXIT SIGN AND EMERGENCY LIGHTS TO THE LOCAL AREA LIGHTING CIRCUIT AHEAD OF THE SWITCH.
2. ALL OUTDOOR LIGHTING SHALL BE CONTROLLED VIA A PHOTOCELL/TIMECLOCK AND CONTACTOR LOCATED IN THE ELECTRICAL ROOM. CONNECT TO CIRCUIT SHOWN.

1 / A201 THIRD FLOOR LIGHITNG PLAN
1/8" = 1'-0"

NEUMANN
SMITH
& ASSOCIATES

Architecture
Planning
Interior Design

400 Galleria Officentre
Suite 555
Southfield, Michigan 48034

248-352-8310
FAX 248-352-1821
NS@neumannsmith.com

Metro Lofts
Royal Oak, Michigan

Consultant

ETS ENGINEERING, INC
ENERGY / TECHNOLOGY SOLUTIONS
418-1/2 S. WASHINGTON
P.O. BOX 1116
ROYAL OAK, MI 48068-1116

OFF: 248/744-0360
FAX: 248 744-0357

Seal

STATE OF MICHIGAN
DOUGLAS A. SWIRES
No. 38685
LICENSED PROFESSIONAL ENGINEER

SEAL IS VALID ONLY IF SIGNED BY THE ENGINEER NAMED.

Revisions

MAY 28, 2004 – CONSTRUCTION & PERMIT

Date
3-17-2004
Drawn
P.S.
Checked
D.S.
Approved

■ Preliminary
☐ Construction
☐ Record

Do not scale
Use figured dimensions only
Copyright © 2003

Bidpak Number

Job Number
23091

Title
Third Floor Lighting Plan

Scale: 1/8" = 1'-0"

Sheet
E203

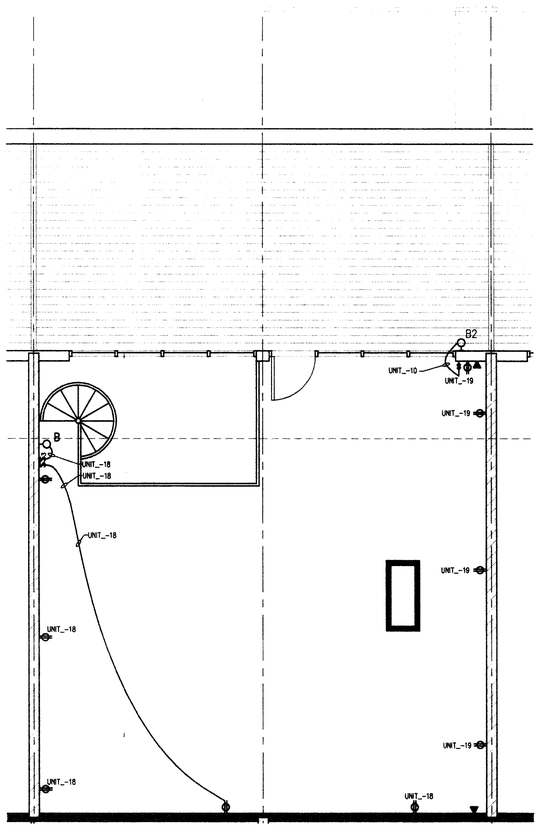

Typical Unit Plans - Mezzanine

Units - 22,23,24,25,26,27,28,29

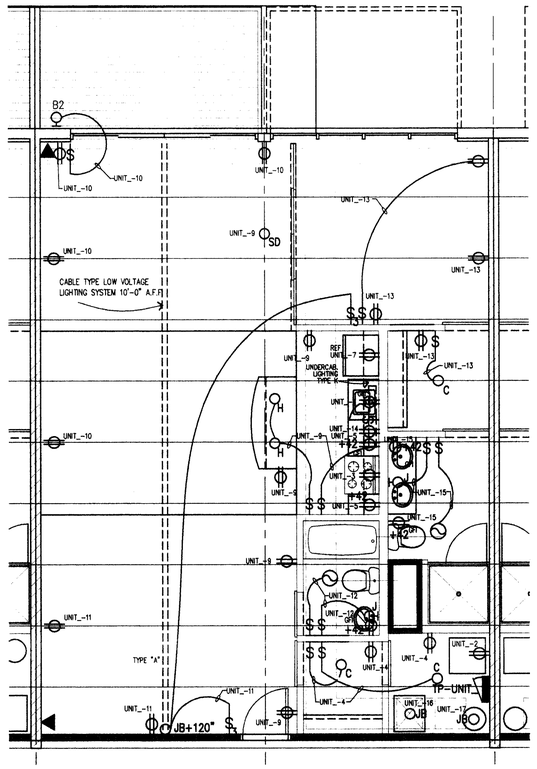

Typical Unit Plans - Second Floor

Units - 12,13,14,15,16,17,18,19

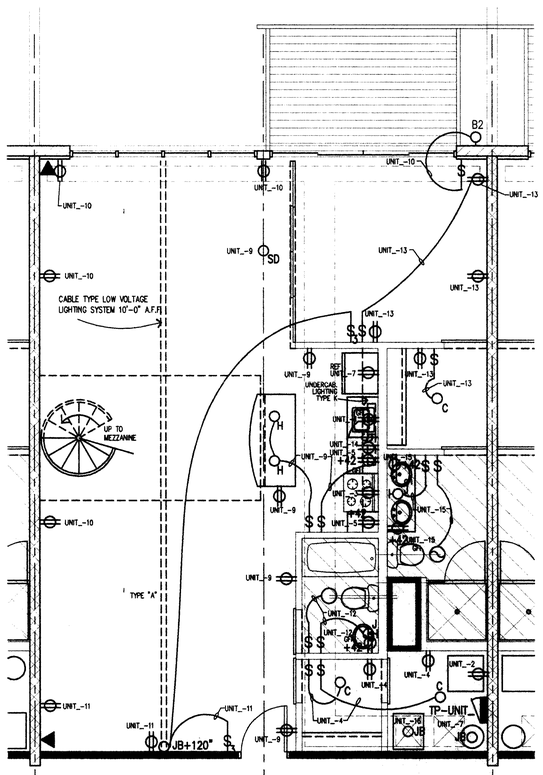

Typical Unit Plans - Third Floor

Units - 22,23,24,25,26,27,28,29

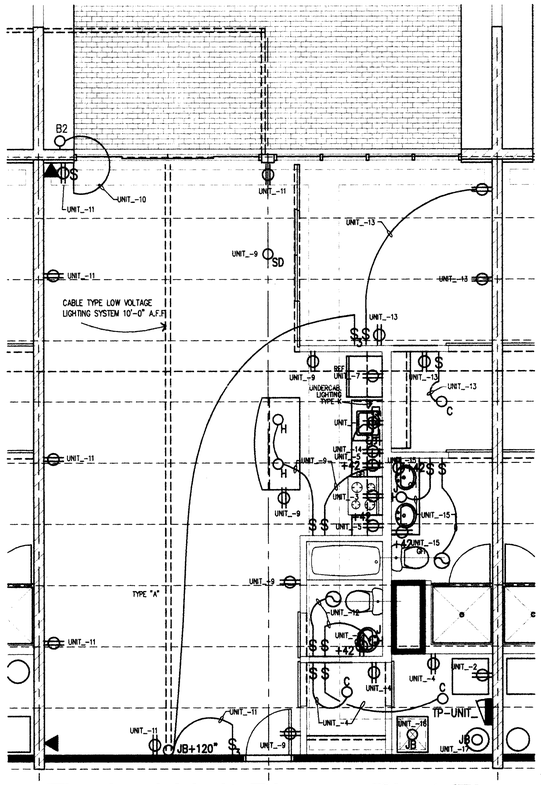

Typical Unit Plans - First Floor

Units - 2,3,4,5,6,7,8,9

NEUMANN
SMITH
& ASSOCIATES

Architecture
Planning
Interior Design

400 Galleria Officentre
Suite 555
Southfield, Michigan 48034

248-352-8310
FAX 248-352-1821
NS@neumannsmith.com

Metro Lofts
Royal Oak, Michigan

Consultant

ETS ENGINEERING, INC.
ENERGY / TECHNOLOGY SOLUTIONS
418-1/2 S. WASHINGTON
P.O. BOX 1116
ROYAL OAK, MI 48068-1116

Off: 248/744-0360
Fax: 248/744-0367

Seal

STATE OF MICHIGAN
DOUGLAS M. SAMES
No. 38685
LICENSED PROFESSIONAL ENGINEER

SEAL IS VALID ONLY IF SIGNED BY THE ENGINEER NAMED.

Revisions

MAY 28, 2004 – CONSTRUCTION & PERMIT

Date
10-14-2003

Drawn
P.S.

Checked
D.S.

Approved

Bidpak Number

■ Preliminary
☐ Construction
☐ Record

Do not scale
Use figured dimensions only
Copyright © 2003

Job Number
23091

Title
Typical Unit Electrical Plans

Scale: 1/4" = 1'-0"

Sheet
E301

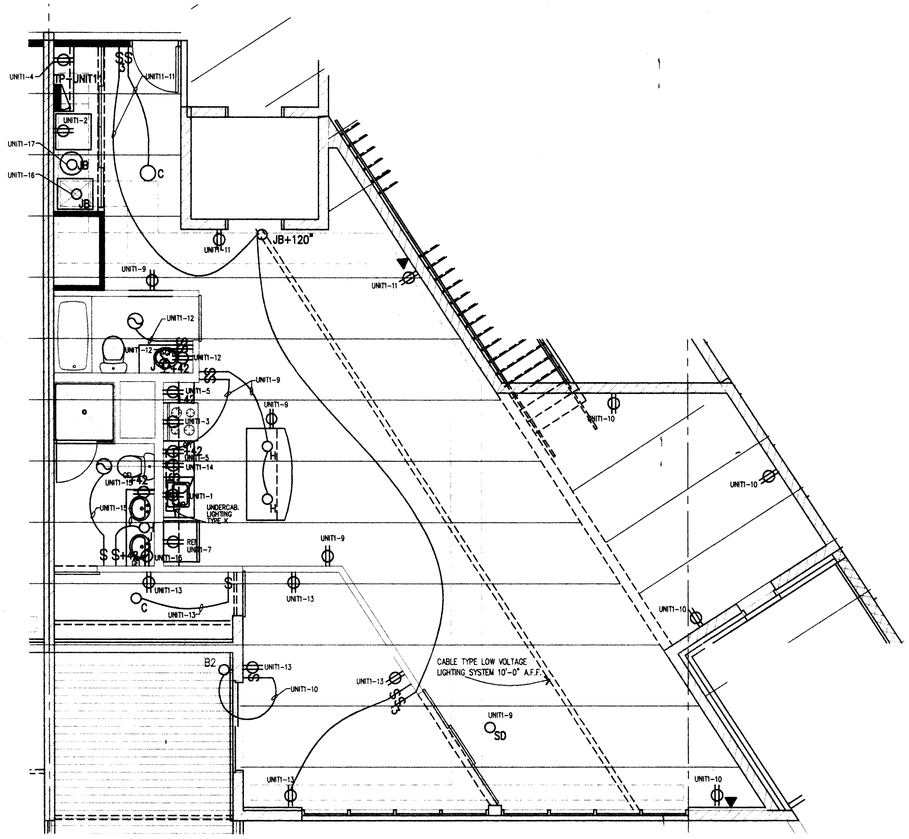

Unit Plan - First Floor

Unit - 1

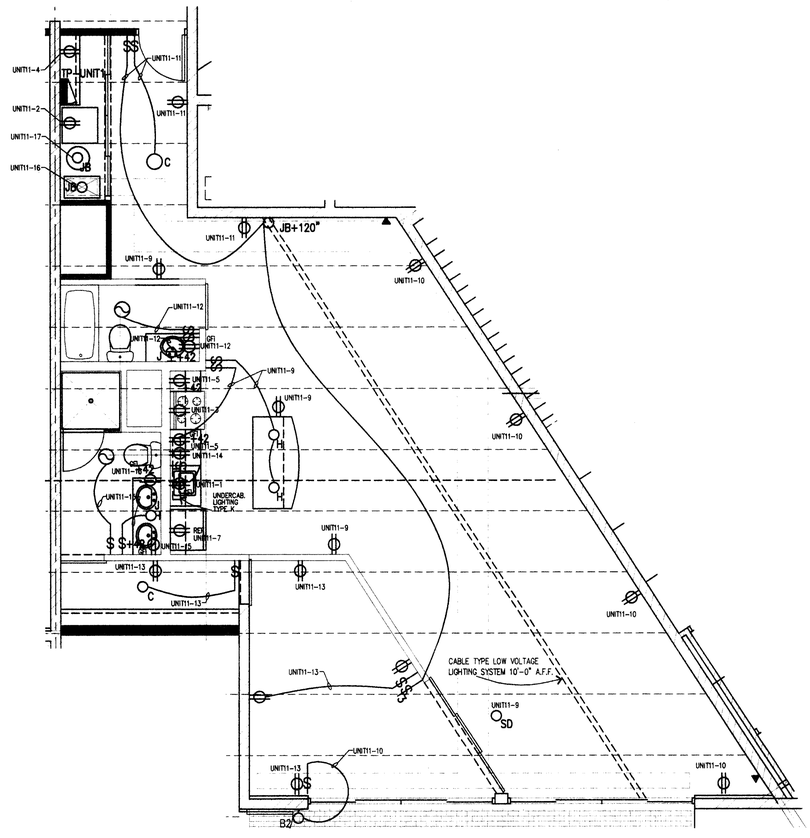

Unit Plan - Second Floor

Unit - 11

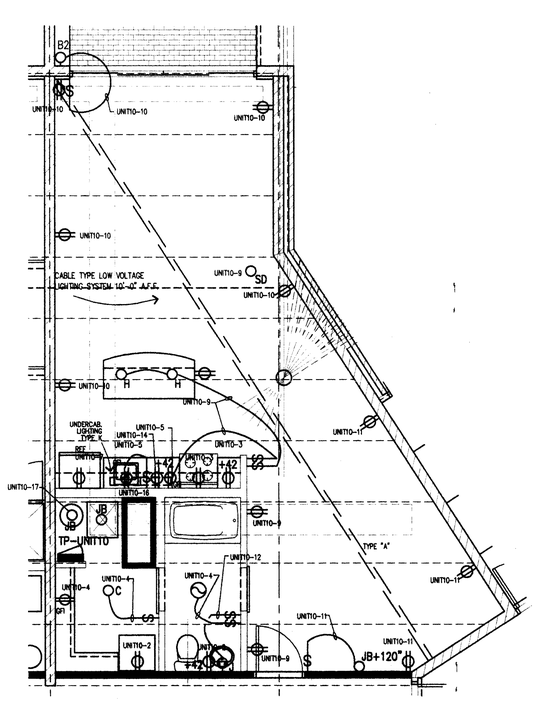

Unit Plan - First Floor

Unit - 10

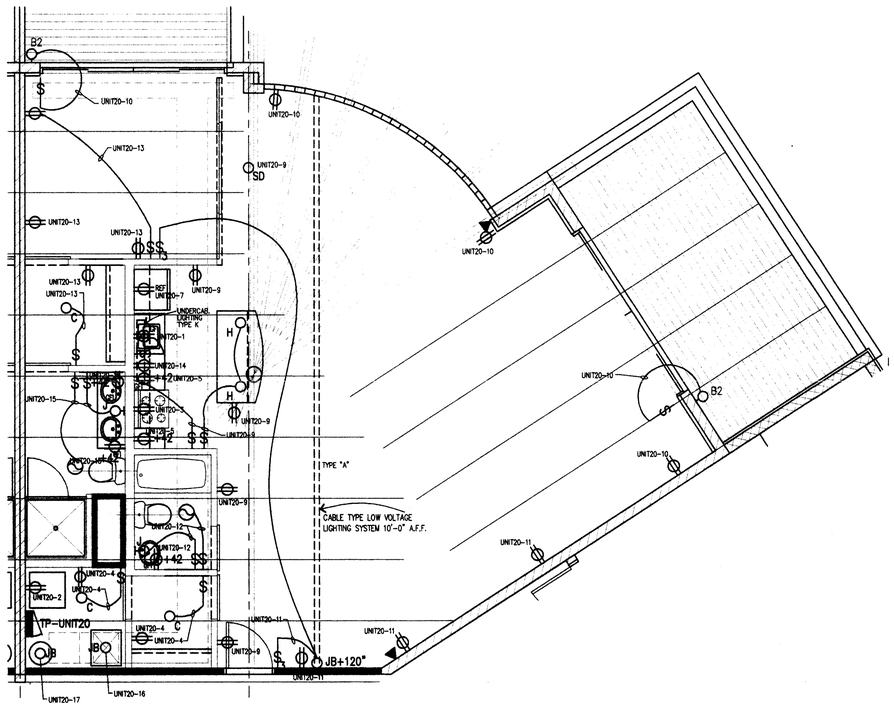

Unit Plan - Second Floor

Unit - 20

NEUMANN SMITH & ASSOCIATES

Architecture
Planning
Interior Design

400 Galleria Officentre
Suite 555
Southfield, Michigan 48034

248-352-8310
FAX 248-352-1821
NS@neumannsmith.com

Metro Lofts

Royal Oak, Michigan

Consultant

ETS ENGINEERING, INC.
ENERGY / TECHNOLOGY SOLUTIONS
41911 2 S. WASHINGTON
P.O. BOX 1116
ROYAL OAK, MI 48068-1116
OFF: 248.744-0360
FAX: 248.744-0367

Seal

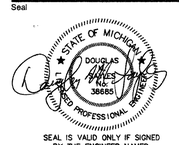

SEAL IS VALID ONLY IF SIGNED BY THE ENGINEER NAMED.

Revisions

MAY 28, 2004 – CONSTRUCTION & PERMIT

Date
10-14-2003

Drawn
P.S.

Checked
D.S.

Approved

Preliminary
Construction
Record

Do not scale
Use figured dimensions only
Copyright © 2003

Bidpak Number

Job Number
23091

Title
Typical Unit Electrical Plans

Scale: 1/4" = 1'-0"

Sheet
E302

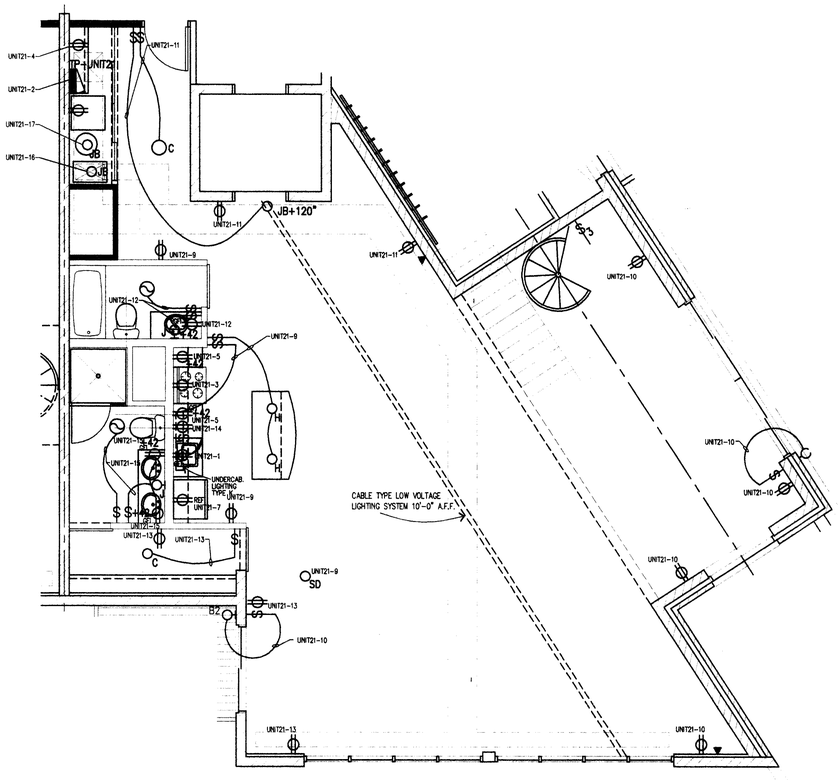

Unit Plan - Third Floor

Unit - 21

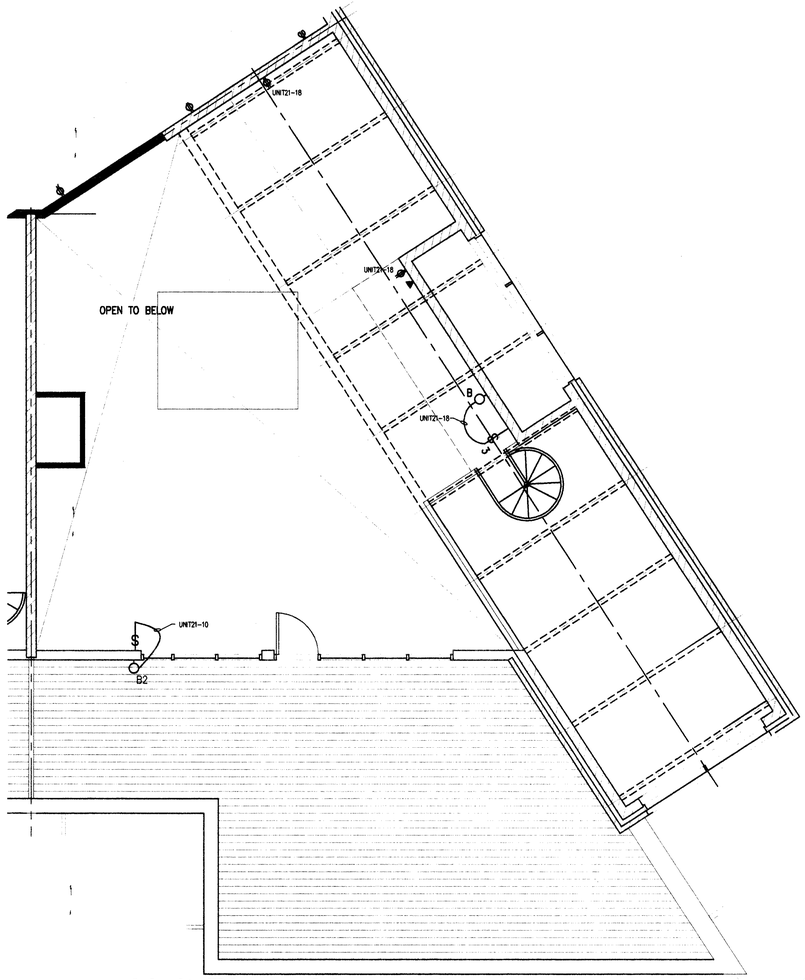

Unit Plan - Mezzanine

Unit - 21

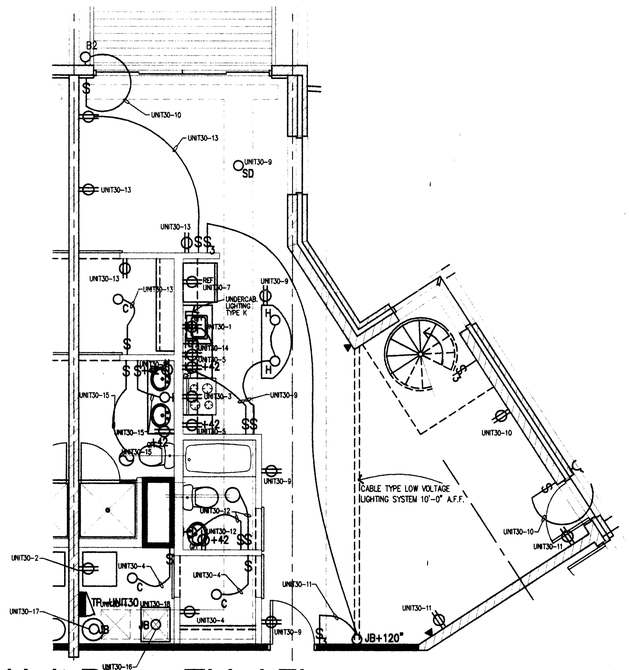

Unit Plan - Third Floor

Unit - 30

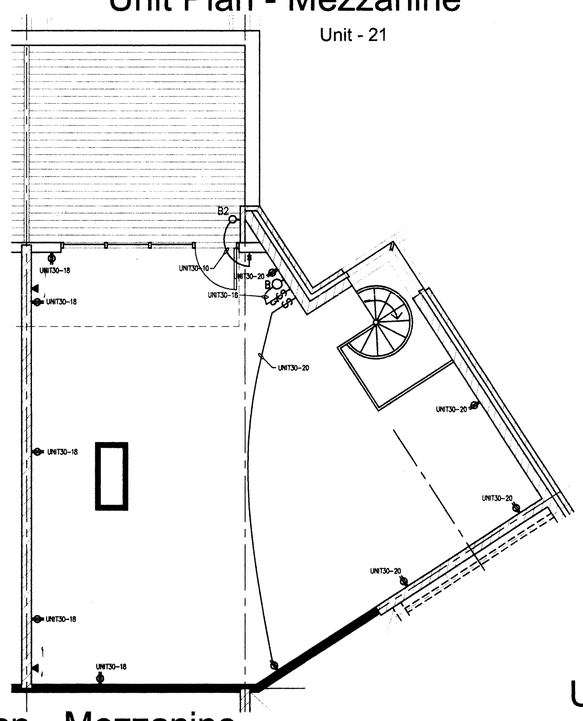

Unit Plan - Mezzanine

Unit - 30

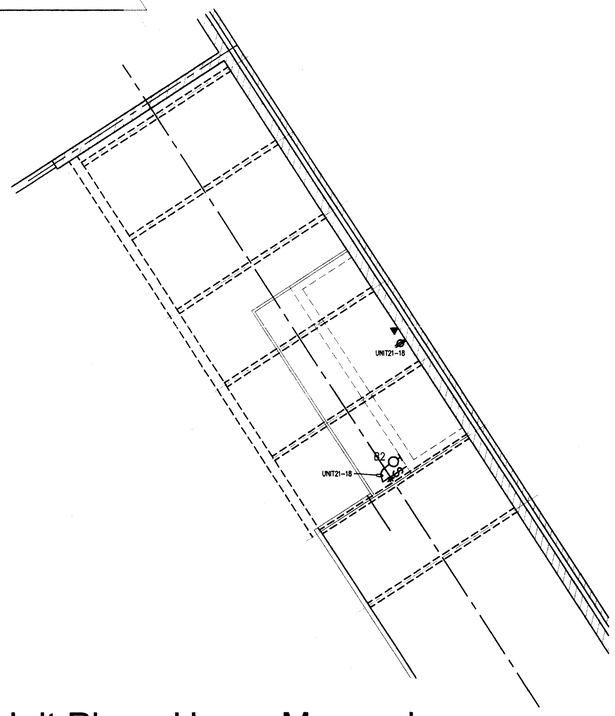

Unit Plan - Upper Mezzanine

Unit - 21

NEUMANN
SMITH
& ASSOCIATES

Architecture
Planning
Interior Design

400 Galleria Officentre
Suite 555
Southfield, Michigan 48034

248-352-8310
FAX 248-352-1821
NS@neumannsmith.com

Metro Lofts
Royal Oak, Michigan

Consultant

ETS ENGINEERING, INC.
ENERGY / TECHNOLOGY SOLUTIONS
418-1/2 S. WASHINGTON
P.O. BOX 1116
ROYAL OAK, MI 48068-1116

OFF: 248/744-0360
FAX: 248/744-0367

Seal

STATE OF MICHIGAN
DOUGLAS
SAMLES
No. 38685
LICENSED PROFESSIONAL ENGINEER

SEAL IS VALID ONLY IF SIGNED BY THE ENGINEER NAMED.

Revisions

MAY 28, 2004 – CONSTRUCTION & PERMIT

Date
10-14-2003

Drawn
P.S.

Checked
D.S.

Approved

Bidpak Number

■ Preliminary
☐ Construction
☐ Record

Do not scale
Use figured dimensions only
Copyright © 2003

Job Number
23091

Title
Typical Unit Electrical Plans

Scale: 1/4" = 1'-0"

Sheet
E303

Units "2,3,4,5,6,7,8,9": 1120 sq. ft.

Each unit has:
3.2 KW A/C Unit
1.2 KW Dishwasher
0.75 KW Refrigerator
0.75 KW Garbage Disposal

Branch Circuit Requirements:

General lighting and receptacles at 3W / sq. ft. = 3360 KW
3360 KW @ 120 V = 28.0 Amps
2 – 20 A lighting circuits
Small Appliance load: 2 – 20 A circuits
Bathroom circuit: 2 – 20 A circuit
Refrigerator: 1 – 20 A circuit
Dishwasher: 1 – 20 A circuit
Garbage Disposal: 1 – 20 A circuit
Gas Stove: 1 – 20 A circuit
A/C Unit: 1 – 20 A, 208 V circuit

Minimum Size Feeder:

General Lighting : 3360 VA
Dishwasher: 1200 VA
Small Appliance: 3000 VA
Refrigerator: 750 VA
Garbage Disposal: 750 VA
Total 9060 VA

3000 VA @ 100% = 3000 VA
9060 VA – 3000 VA = 6060 VA @ 35% = 2121 VA

Demand Load: 5121 VA
A/C Unit: 3000 VA

Net computed load: 8121 VA
Service Conductor size: 8121 VA @ 208 V = 39.0 Amps

Service Neutral Calculation:

Lighting & Small Appliance: 9060 VA
A/C Unit: 3000 VA @ 70% = 2100 VA
Total 11,160 VA

Computed Load for neutral: 11,160 VA @ 208 V = 53.7 A

TOTAL NET CONNECTED LOAD = 10,860 VA (52.2A)

Units "12,13,14,15,16,17,18,19": 1120 sq. ft.

Each unit has:
3.2 KW A/C Unit
1.2 KW Dishwasher
0.75 KW Refrigerator
0.75 KW Garbage Disposal

Branch Circuit Requirements:

General lighting and receptacles at 3W / sq. ft. = 3360 KW
3360 KW @ 120 V = 28.0 Amps
2 – 20 A lighting circuits
Small Appliance load: 2 – 20 A circuits
Bathroom circuit: 2 – 20 A circuit
Refrigerator: 1 – 20 A circuit
Dishwasher: 1 – 20 A circuit
Garbage Disposal: 1 – 20 A circuit
Gas Stove: 1 – 20 A circuit
A/C Unit: 1 – 20 A, 208 V circuit

Minimum Size Feeder:

General Lighting : 3360 VA
Dishwasher: 1200 VA
Small Appliance: 3000 VA
Refrigerator: 750 VA
Garbage Disposal: 750 VA
Total 9060 VA

3000 VA @ 100% = 3000 VA
9060 VA – 3000 VA = 6060 VA @ 35% = 2121 VA

Demand Load: 5121 VA
A/C Unit: 3000 VA

Net computed load: 8121 VA
Service Conductor size: 8121 VA @ 208 V = 39.0 Amps

Service Neutral Calculation:

Lighting & Small Appliance: 9060 VA
A/C Unit: 3000 VA @ 70% = 2100 VA
Total 11,160 VA

Computed Load for neutral: 11,160 VA @ 208 V = 53.7 A

TOTAL NET CONNECTED LOAD = 10,860 VA (52.2A)

Units "22,23,24,25,26,27,28,29": 1976 sq. ft.

Each unit has:
4.5 KW A/C Unit
1.2 KW Dishwasher
0.75 KW Refrigerator
0.75 KW Garbage Disposal

Branch Circuit Requirements:

General lighting and receptacles at 3W / sq. ft. = 5928 KW
5928 KW @ 120 V = 49.4 Amps
2 – 20 A lighting circuits
Small Appliance load: 2 – 20 A circuits
Bathroom circuit: 2 – 20 A circuit
Refrigerator: 1 – 20 A circuit
Dishwasher: 1 – 20 A circuit
Garbage Disposal: 1 – 20 A circuit
Gas Stove: 1 – 20 A circuit
A/C Unit: 1 – 30 A, 208 V circuit

Minimum Size Feeder:

General Lighting : 5928 VA
Dishwasher: 1200 VA
Small Appliance: 3000 VA
Refrigerator: 750 VA
Garbage Disposal: 750 VA
Total 11,628 VA

3000 VA @ 100% = 3000 VA
11,628 VA – 3000 VA = 8628 VA @ 35% = 3020 VA

Demand Load: 6020 VA
A/C Unit: 3000 VA

Net computed load: 9020 VA
Service Conductor size: 9020 VA @ 208 V = 43.4 Amps

Service Neutral Calculation:

Lighting & Small Appliance: 11,628 VA
A/C Unit: 3000 VA @ 70% = 2100 VA
Total 13,728 VA

Computed Load for neutral: 13,728 VA @ 208 V = 66.0 A

TOTAL NET CONNECTED LOAD = 13,428 VA (64.6A)

Unit "1": 1248 sq. ft.

Each unit has:
3.2 KW A/C Unit
1.2 KW Dishwasher
0.75 KW Refrigerator
0.75 KW Garbage Disposal

Branch Circuit Requirements:

General lighting and receptacles at 3W / sq. ft. = 3744 KW
3744 KW @ 120 V = 31.2 Amps
1 – 20 A lighting circuits
Small Appliance load: 2 – 20 A circuit
Bathroom circuit: 1 – 20 A circuit
Refrigerator: 1 – 20 A circuit
Dishwasher: 1 – 20 A circuit
Garbage Disposal: 1 – 20 A circuit
Gas Stove: 1 – 20 A circuit
A/C Unit: 1 – 20 A, 208 V circuit

Minimum Size Feeder:

General Lighting : 3744 VA
Dishwasher: 1200 VA
Small Appliance: 3000 VA
Refrigerator: 750 VA
Garbage Disposal: 750 VA
Total 9444 VA

3000 VA @ 100% = 3000 VA
9444 VA – 3000 VA = 6444 VA @ 35% = 2255 VA

Demand Load: 5255 VA
A/C Unit: 3000 VA

Net computed load: 8255 VA
Service Conductor size: 8255 VA @ 208 V = 40.0 Amps

Service Neutral Calculation:

Lighting & Small Appliance: 9444 VA
A/C Unit: 3000 VA @ 70% = 2100 VA
Total 11,544 VA

Computed Load for neutral: 11,544 VA @ 208 V = 55.5 A

TOTAL NET CONNECTED LOAD = 11,244 VA (54.1A)

Unit "10": 764 sq. ft.

Each unit has:
3.2 KW A/C Unit
1.2 KW Dishwasher
0.75 KW Refrigerator
0.75 KW Garbage Disposal

Branch Circuit Requirements:

General lighting and receptacles at 3W / sq. ft. = 2292 KW
2292 KW @ 120 V = 19.1 Amps
1 – 20 A lighting circuits
Small Appliance load: 2 – 20 A circuits
Bathroom circuit: 1 – 20 A circuit
Refrigerator: 1 – 20 A circuit
Dishwasher: 1 – 20 A circuit
Garbage Disposal: 1 – 20 A circuit
Gas Stove: 1 – 20 A circuit
A/C Unit: 1 – 20 A, 208 V circuit

Minimum Size Feeder:

General Lighting : 2292 VA
Dishwasher: 1200 VA
Small Appliance: 3000 VA
Refrigerator: 750 VA
Garbage Disposal: 750 VA
Total 7992 VA

3000 VA @ 100% = 3000 VA
7992 VA – 3000 VA = 4992 VA @ 35% = 1747 VA

Demand Load: 4747 VA
A/C Unit: 3000 VA

Net computed load: 7747 VA
Service Conductor size: 7747 VA @ 208 V = 37.2 Amps

Service Neutral Calculation:

Lighting & Small Appliance: 7992 VA
A/C Unit: 3000 VA @ 70% = 2100 VA
Total 10,092 VA

Computed Load for neutral: 10,092 VA @ 208 V = 48.5 A

TOTAL NET CONNECTED LOAD = 9792 VA (47.1A)

Unit "11": 1453 sq. ft.

Each unit has:
3.2 KW A/C Unit
1.2 KW Dishwasher
0.75 KW Refrigerator
0.75 KW Garbage Disposal

Branch Circuit Requirements:

General lighting and receptacles at 3W / sq. ft. = 4359 KW
4359 KW @ 120 V = 36.3 Amps
2 – 20 A lighting circuits
Small Appliance load: 2 – 20 A circuits
Bathroom circuit: 2 – 20 A circuit
Refrigerator: 1 – 20 A circuit
Dishwasher: 1 – 20 A circuit
Garbage Disposal: 1 – 20 A circuit
Gas Stove: 1 – 20 A circuit
A/C Unit: 1 – 20 A, 208 V circuit

Minimum Size Feeder:

General Lighting : 4359 VA
Dishwasher: 1200 VA
Small Appliance: 3000 VA
Refrigerator: 750 VA
Garbage Disposal: 750 VA
Total 8859 VA

3000 VA @ 100% = 3000 VA
8859 VA – 3000 VA = 5859 VA @ 35% = 2051 VA

Demand Load: 5051 VA
A/C Unit: 3000 VA

Net computed load: 8051 VA
Service Conductor size: 8051 VA @ 208 V = 38.7 Amps

Service Neutral Calculation:

Lighting & Small Appliance: 8859 VA
A/C Unit: 3000 VA @ 70% = 2100 VA
Total 10,959 VA

Computed Load for neutral: 10,959 VA @ 208 V = 52.7 A

1,859 VA (57.0A)

Unit "20": 1312 sq. ft.

Each unit has:
3.2 KW A/C Unit
1.2 KW Dishwasher
0.75 KW Refrigerator
0.75 KW Garbage Disposal

Branch Circuit Requirements:

General lighting and receptacles at 3W / sq. ft. = 3936 KW
3936 KW @ 120 V = 32.8 Amps
2 – 20 A lighting circuits
Small Appliance load: 2 – 20 A circuits
Bathroom circuit: 2 – 20 A circuit
Refrigerator: 1 – 20 A circuit
Dishwasher: 1 – 20 A circuit
Garbage Disposal: 1 – 20 A circuit
Gas Stove: 1 – 20 A circuit
A/C Unit: 1 – 20 A, 208 V circuit

Minimum Size Feeder:

General Lighting : 3936 VA
Dishwasher: 1200 VA
Small Appliance: 3000 VA
Refrigerator: 750 VA
Garbage Disposal: 750 VA
Total 8436 VA

3000 VA @ 100% = 3000 VA
8436 VA – 3000 VA = 5436 VA @ 35% = 1903 VA

Demand Load: 4903 VA
A/C Unit: 3000 VA

Net computed load: 7903 VA
Service Conductor size: 7903 VA @ 208 V = 38.0 Amps

Service Neutral Calculation:

Lighting & Small Appliance: 8436 VA
A/C Unit: 3000 VA @ 70% = 2100 VA
Total 10,536 VA

Computed Load for neutral: 10,536 VA @ 208 V = 50.7 A

TOTAL NET CONNECTED LOAD = 11,436 VA (55.0A)

Unit "21": 3223 sq. ft.

Each unit has:
7.8 KW A/C Unit
1.2 KW Dishwasher
0.75 KW Refrigerator
0.75 KW Garbage Disposal

Branch Circuit Requirements:

General lighting and receptacles at 3W / sq. ft. = 9669 KW
9669 KW @ 120 V = 80.6 Amps
2 – 20 A lighting circuits
Small Appliance load: 2 – 20 A circuits
Bathroom circuit: 2 – 20 A circuit
Refrigerator: 1 – 20 A circuit
Dishwasher: 1 – 20 A circuit
Garbage Disposal: 1 – 20 A circuit
Gas Stove: 1 – 20 A circuit
A/C Unit: 1 – 60 A, 208 V circuit

Minimum Size Feeder:

General Lighting : 9669 VA
Dishwasher: 1200 VA
Small Appliance: 3000 VA
Refrigerator: 750 VA
Garbage Disposal: 750 VA
Total 14169 VA

3000 VA @ 100% = 3000 VA
14169 VA – 3000 VA = 11169 VA @ 35% = 3909 VA

Demand Load: 6909 VA
A/C Unit: 3000 VA

Net computed load: 9909 VA
Service Conductor size: 9909 VA @ 208 V = 47.6 Amps

Service Neutral Calculation:

Lighting & Small Appliance: 14169 VA
A/C Unit: 3000 VA @ 70% = 2100 VA
Total 16269 VA

Computed Load for neutral: 16269 VA @ 208 V = 78.2 A

TOTAL NET CONNECTED LOAD = 17,169 VA (82.5A)

Unit "30": 1685 sq. ft.

Each unit has:
4.5 KW A/C Unit
1.2 KW Dishwasher
0.75 KW Refrigerator
0.75 KW Garbage Disposal

Branch Circuit Requirements:

General lighting and receptacles at 3W / sq. ft. = 5055 KW
5055 KW @ 120 V = 42.1 Amps
1 – 20 A lighting circuits
Small Appliance load: 2 – 20 A circuits
Bathroom circuit: 1 – 20 A circuit
Refrigerator: 1 – 20 A circuit
Dishwasher: 1 – 20 A circuit
Garbage Disposal: 1 – 20 A circuit
A/C Unit: 1 – 30 A, 208 V circuit

Minimum Size Feeder:

General Lighting : 5055 VA
Dishwasher: 1200 VA
Small Appliance: 3000 VA
Refrigerator: 750 VA
Garbage Disposal: 750 VA
Total 9555 VA

3000 VA @ 100% = 3000 VA
9555 VA – 3000 VA = 6555 VA @ 35% = 2294 VA

Demand Load: 5294 VA
A/C Unit: 3000 VA

Net computed load: 8294 VA
Service Conductor size: 8294 VA @ 208 V = 39.9 Amps

Service Neutral Calculation:

Lighting & Small Appliance: 9555 VA
A/C Unit: 3000 VA @ 70% = 2100 VA
Total 11,655 VA

Computed Load for neutral: 11,655 VA @ 208 V = 56.0 A

TOTAL NET CONNECTED LOAD = 12,555 VA (60.4A)

Main Distribution Panel
MDP

Multi-Family Dwelling Load Calculation:
UNIT "1": 1 * 11,244 = 11,244 VA
UNITS "2,3,4,5,6,7,8,9": 8 * 10,860 VA = 86,880 VA
UNIT "10": 1 * 9,792 = 9,792 VA
UNIT "11": 1 * 11,859 = 11,859 VA
UNITS "12,13,14,15,16,17,18,19": 8 * 10,860 VA = 86,880 VA
UNIT "20": 1 * 11,436 = 11,436 VA
UNIT "21": 1 * 17,169 = 17,169 VA
UNITS "22,23,24,25,26,27,28,29": 8 * 13,428 VA = 107,424 VA
UNIT "30": 1 * 12,555 = 12,555 VA

TOTAL NET CONNECTED LOAD = 355,239 VA
Total Number of Units fed from this Feeder: 30 Units

Per NEC Table 220-32 "Optional Calculations – Demand Factors for Three or More Multifamily Dwelling Units" 30 Units would translate to a demand factor of 33%

DEMAND LOAD
355,239 VA @ 33% = 117,229 VA
117,229 VA @ 208V/3PH = 325.0 A

LOAD SUMMARY:

30 UNITS: 355,239 VA CONNECTED / 117,229 VA DEMAND
HOUSE LIGHTING: 6,500 VA CONNECTED / 6,500 VA DEMAND
HOUSE MECHANICAL: 83,792 VA CONNECTED / 83,792 VA DEMAND

TOTAL BUILDING CONNECTED LOAD: 445,531 VA / 1,238 A
TOTAL BUILDING DEMAND LOAD: 207,521 VA / 576 A

NEUMANN SMITH & ASSOCIATES

Architecture
Planning
Interior Design

400 Galleria Officentre
Suite 555
Southfield, Michigan 48034

248-352-8310
FAX 248-352-1821
NS@neumannsmith.com

Metro Lofts
Royal Oak, Michigan

Consultant

ETS ENGINEERING, INC.
ENERGY TECHNOLOGY SOLUTIONS
418-1/2 S. Washington
P.O. Box 1116
Royal Oak, MI 48068-1116

OFF: 248-744-0360
FAX: 248-744-0367

Seal

STATE OF MICHIGAN
DOUGLAS M. PAYNE
No. 38685
REGISTERED PROFESSIONAL ENGINEER

SEAL IS VALID ONLY IF SIGNED BY THE ENGINEER NAMED.

Revisions

MAY 28, 2004 – CONSTRUCTION & PERMIT

Date
10-14-2003
Drawn
P.S.
Checked
D.S.
Approved

■ Preliminary
☐ Construction
☐ Record

Do not scale
Use figured dimensions only
Copyright © 2003

Bidpak Number

Job Number
23091

Title
Unit Load Schedules

Scale: 1/8" = 1'-0"

Sheet
E401

FEEDER SCHEDULE			
FEEDER TAG	CONDUIT SIZE	WIRE SIZE	???
100-1	1-1/4"	3#3 & 1#8G	100A / 1PH
125-1	1-1/2"	4#1 & 1#6G	125A / 1PH
200-1	2"	3#3/0 & 1#6G	200A / 1PH
30-3	3/4"	4#10 & 1#10G	30A / 3PH
60-3	3/4"	4#6 & 1#10G	60A / 3PH
100-3	1-1/4"	4#3 & 1#8G	100A / 3PH
130-3	1-1/2"	4#1 & 1#6G	125A / 3PH
150-3	1-1/2"	4#1/0 & 1#6G	150A / 3PH
200-3	2"	4#3/0 & 1#6G	200A / 3PH
400-3	4"	4#500KCMIL & 1#3G	400A / 3PH
800-3	2 @ 4"	4#350KCMIL & 1#1G	600A / 3PH

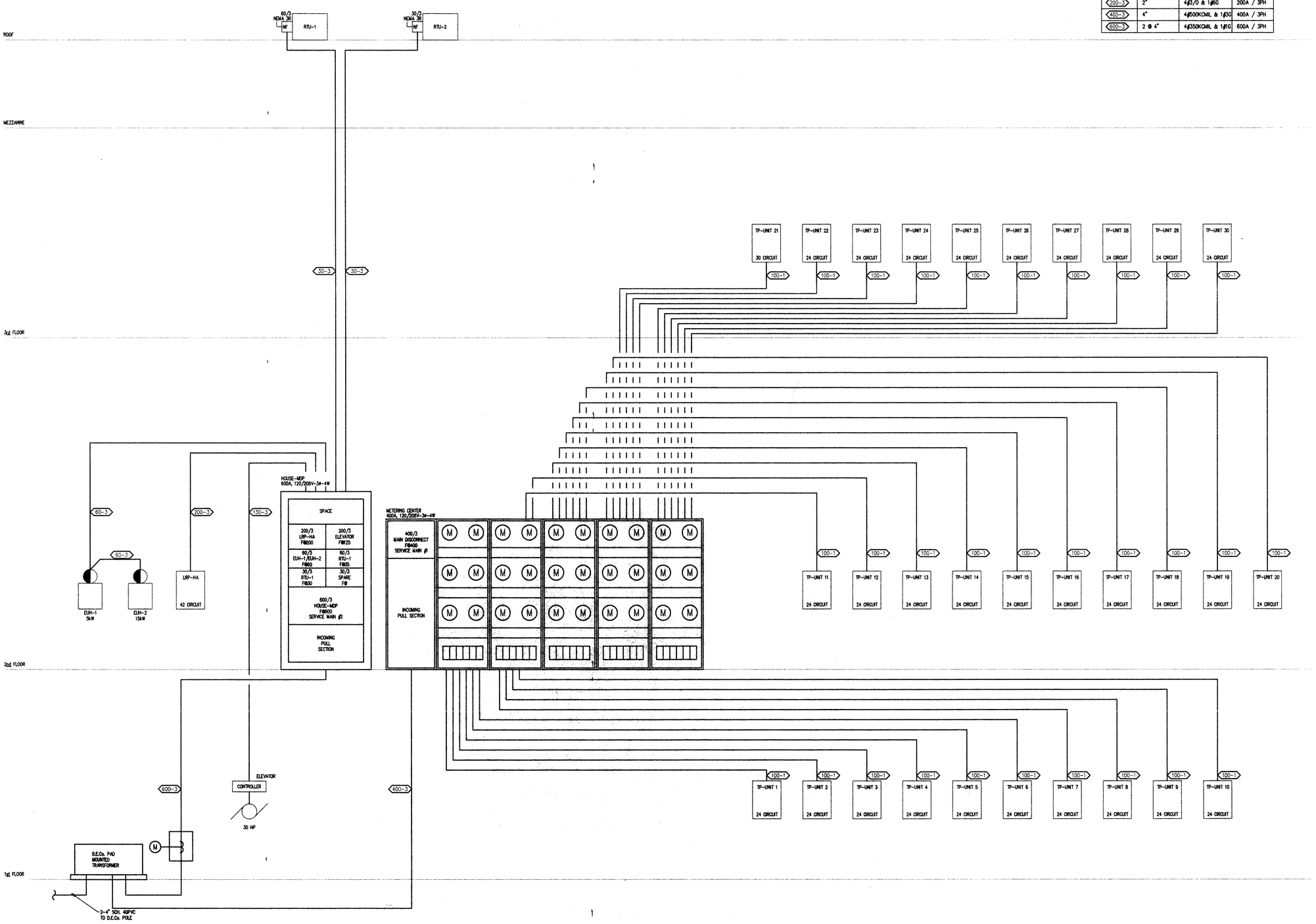

NEUMANN SMITH & ASSOCIATES

Architecture
Planning
Interior Design

400 Galleria Officentre
Suite 555
Southfield, Michigan 48034

248-352-8310
FAX 248-352-1821
NS@neumannsmith.com

Metro Lofts

Royal Oak, Michigan

Consultant

ETS ENGINEERING, INC.
ENERGY - TECHNOLOGY SOLUTIONS
418-1/2 S. WASHINGTON
P.O. Box 1116
ROYAL OAK, MI 48068-1116

OFF: 248 744-0360
FAX: 248 744-0367

Seal

SEAL IS VALID ONLY IF SIGNED BY THE ENGINEER NAMED.

Revisions

MAY 28, 2004 - CONSTRUCTION & PERMIT

Date
10-14-2003

Drawn
P.S.

Checked
D.S.

Approved

Bidpak Number

- [x] Preliminary
- [ ] Construction
- [ ] Record

Do not scale
Use figured dimensions only

Copyright © 2003

Job Number
23091

Title
One-Line Riser Diagram and Grounding Detail

Scale: 1/8" = 1'-0"

Sheet
E501

TP-UNIT1

LOCATION – Loft Unit 1

VOLTAGE, PHASE, WIRE – 120/208V, 1PH, 3W — BKR. TYPE – BOLT ON
MAIN BREAKER – 150A — AIC RATING – 10,000

CIR. NO.	BKR	DESCRIPTION	LOAD VA	CIR. NO.	BKR	DESCRIPTION	LOAD VA
1	20/1	Garbage Disposal	750	2	20/1	Combo Washer/Dryer	1500
3	20/1	Gas Stove	1500	4	20/1	Laundry Recpt.	360
5	20/1	Kitchen Conv. Outlets	360	6	20/2	A/C Unit	3225
7	20/1	Refrigerator	750	8			
9	20/1	Kitchen Recept. & Ltg.	610	10	20/1	Living Rm. Recept & Ext.Ltg.	820
11	20/1	Living Room Recept & Ltg.	980	12	20/1	Bathroom Recept., Ltg.& Fan	580
13	20/1	Bed/Closet Recept. & Ltg.	900	14	20/1	Dishwasher	1200
15	20/1	Bathroom Recept., Ltg.& Fan	750	16	20/1	Furnace	810
17	20/1	Water Heater	500	18	20/1	Garage	750
19	20/1	Spare		20	20/1	Spare	
21	20/1	Spare		22	20/1	Spare	
23		Space		24		Space	

TOTAL CONNECTED LOAD 16.325 KVA 78.5 AMPS

TP-UNIT_

LOCATION – Loft Units 2,3,4,5

VOLTAGE, PHASE, WIRE – 120/208V, 1PH, 3W — BKR. TYPE – BOLT ON
MAIN BREAKER – 150A — AIC RATING – 10,000

CIR. NO.	BKR	DESCRIPTION	LOAD VA	CIR. NO.	BKR	DESCRIPTION	LOAD VA
1	20/1	Garbage Disposal	750	2	20/1	Combo Washer/Dryer	1500
3	20/1	Gas Stove	1500	4	20/1	Laundry Recpt.	360
5	20/1	Kitchen Conv. Outlets	360	6	20/2	A/C Unit	3225
7	20/1	Refrigerator	750	8			
9	20/1	Kitchen Recept. & Ltg.	610	10	20/1	Living Rm. Recept & Ext.Ltg.	820
11	20/1	Living Room Recept & Ltg.	880	12	20/1	Bathroom Recept., Ltg.& Fan	580
13	20/1	Bed/Closet Recept. & Ltg.	820	14	20/1	Dishwasher	1200
15	20/1	Bathroom Recept., Ltg.& Fan	750	16	20/1	Furnace	810
17	20/1	Water Heater	500	18	20/1	Garage	750
19	20/1	Spare		20	20/1	Spare	
21	20/1	Spare		22	20/1	Spare	
23		Space		24		Space	

TOTAL CONNECTED LOAD 16.145 KVA 77.7 AMPS

TP-UNIT_

LOCATION – Loft Units 6,7,8,9

VOLTAGE, PHASE, WIRE – 120/208V, 1PH, 3W — BKR. TYPE – BOLT ON
MAIN BREAKER – 150A — AIC RATING – 10,000

CIR. NO.	BKR	DESCRIPTION	LOAD VA	CIR. NO.	BKR	DESCRIPTION	LOAD VA
1	20/1	Garbage Disposal	750	2	20/1	Combo Washer/Dryer	1500
3	20/1	Gas Stove	1500	4	20/1	Laundry Recpt.	360
5	20/1	Kitchen Conv. Outlets	360	6	20/2	A/C Unit	3225
7	20/1	Refrigerator	750	8			
9	20/1	Kitchen Recept. & Ltg.	810	10	20/1	Living Rm. Recept & Ext.Ltg.	820
11	20/1	Living Room Recept & Ltg.	880	12	20/1	Bathroom Recept., Ltg.& Fan	580
13	20/1	Bed/Closet Recept. & Ltg.	820	14	20/1	Dishwasher	1200
15	20/1	Bathroom Recept., Ltg.& Fan	750	16	20/1	Furnace	810
17	20/1	Water Heater	500	18	20/1	Spare	
19	20/1	Spare		20	20/1	Spare	
21	20/1	Spare		22	20/1	Spare	
23		Space		24		Space	

TOTAL CONNECTED LOAD 15.395 KVA 74.0 AMPS

TP-UNIT10

LOCATION – Loft Unit 10

VOLTAGE, PHASE, WIRE – 120/208V, 1PH, 3W — BKR. TYPE – BOLT ON
MAIN BREAKER – 150A — AIC RATING – 10,000

CIR. NO.	BKR	DESCRIPTION	LOAD VA	CIR. NO.	BKR	DESCRIPTION	LOAD VA
1	20/1	Garbage Disposal	750	2	20/1	Combo Washer/Dryer	1500
3	20/1	Gas Stove	1500	4	20/1	Laundry/Closet Recp.& Ltg.	500
5	20/1	Kitchen Conv. Outlets	360	6	20/2	A/C Unit	3225
7	20/1	Refrigerator	750	8			
9	20/1	Kitchen Recept. & Ltg.	710	10	20/1	Living Rm. Recept & Ext.Ltg.	750
11	20/1	Living Room Recept & Ltg.	1220	12	20/1	Bathroom Recept., Ltg.& Fan	580
13	20/1	Spare		14	20/1	Dishwasher	1200
15	20/1	Bathroom Recept., Ltg.& Fan	750	16	20/1	Furnace	810
17	20/1	Water Heater		18	20/1	Spare	
19	20/1	Spare		20	20/1	Spare	
21		Space		22		Space	
23		Space		24		Space	

TOTAL CONNECTED LOAD 14.605 KVA 70.3 AMPS

TP-UNIT11

LOCATION – Loft Unit 11

VOLTAGE, PHASE, WIRE – 120/208V, 1PH, 3W — BKR. TYPE – BOLT ON
MAIN BREAKER – 150A — AIC RATING – 10,000

CIR. NO.	BKR	DESCRIPTION	LOAD VA	CIR. NO.	BKR	DESCRIPTION	LOAD VA
1	20/1	Garbage Disposal	750	2	20/1	Combo Washer/Dryer	1500
3	20/1	Gas Stove	1500	4	20/1	Laundry/Closet Recpt.	360
5	20/1	Kitchen Conv. Outlets	360	6	20/2	A/C Unit	3225
7	20/1	Refrigerator	750	8			
9	20/1	Kitchen Recept. & Ltg.	900	10	20/1	Living Rm. Recept & Ext.Ltg.	820
11	20/1	Living Room Recept & Ltg.	980	12	20/1	Bathroom Recept., Ltg.& Fan	580
13	20/1	Bed/Closet Recept. & Ltg.	1180	14	20/1	Dishwasher	1200
15	20/1	Bathroom Recept., Ltg.& Fan	750	16	20/1	Furnace	810
17	20/1	Water Heater	500	18	20/1	Spare	
19	20/1	Spare		20	20/1	Spare	
21	20/1	Spare		22	20/1	Spare	
23		Space		24		Space	

TOTAL CONNECTED LOAD 16.145 KVA 77.7 AMPS

TP-UNIT_

LOCATION – Loft Units 12,13,14

VOLTAGE, PHASE, WIRE – 120/208V, 1PH, 3W — BKR. TYPE – BOLT ON
MAIN BREAKER – 150A — AIC RATING – 10,000

CIR. NO.	BKR	DESCRIPTION	LOAD VA	CIR. NO.	BKR	DESCRIPTION	LOAD VA
1	20/1	Garbage Disposal	750	2	20/1	Combo Washer/Dryer	1500
3	20/1	Gas Stove	1500	4	20/1	Laundry Recpt. & Ltg.	580
5	20/1	Kitchen Conv. Outlets	360	6	20/2	A/C Unit	3225
7	20/1	Refrigerator	750	8			
9	20/1	Kitchen Recept. & Ltg.	610	10	20/1	Living Rm. Recept & Ext.Ltg.	820
11	20/1	Living Room Recept & Ltg.	880	12	20/1	Bathroom Recept., Ltg.& Fan	580
13	20/1	Bed/Closet Recept. & Ltg.	820	14	20/1	Dishwasher	1200
15	20/1	Bathroom Recept., Ltg.& Fan	750	16	20/1	Furnace	810
17	20/1	Water Heater	500	18	20/1	Spare	
19	20/1	Spare		20	20/1	Spare	
21	20/1	Spare		22	20/1	Spare	
23		Space		24		Space	

TOTAL CONNECTED LOAD 15.565 KVA 75.0 AMPS

TP-UNIT_

LOCATION – Loft Units 15,16

VOLTAGE, PHASE, WIRE – 120/208V, 1PH, 3W — BKR. TYPE – BOLT ON
MAIN BREAKER – 150A — AIC RATING – 10,000

CIR. NO.	BKR	DESCRIPTION	LOAD VA	CIR. NO.	BKR	DESCRIPTION	LOAD VA
1	20/1	Garbage Disposal	750	2	20/1	Combo Washer/Dryer	1500
3	20/1	Gas Stove	1500	4	20/1	Laundry Room Recept.& Ltg.	580
5	20/1	Kitchen Conv. Outlets	360	6	30/2	A/C Unit	3830
7	20/1	Refrigerator	750	8			
9	20/1	Kitchen Conv. Outlets & Ltg.	840	10	20/1	Living Rm. Recept & Ext.Ltg.	820
11	20/1	Living Room Recept & Ltg.	1660	12	20/1	Bathroom Recept., Ltg.& Fan	580
13	20/1	Bed/Closet Ltg. & Recept.	820	14	20/1	Dishwasher	1200
15	20/1	Bathroom Recept., Ltg.& Fan	750	16	20/1	Furnace	810
17	20/1	Water Heater	500	18	20/1	Spare	
19	20/1	Spare		20	20/1	Spare	
21	20/1	Spare		22	20/1	Spare	
23		Space		24		Space	

TOTAL CONNECTED LOAD 17.23 KVA 82.9 AMPS

TP-UNIT_

LOCATION – Loft Units 17,18,19

VOLTAGE, PHASE, WIRE – 120/208V, 1PH, 3W — BKR. TYPE – BOLT ON
MAIN BREAKER – 150A — AIC RATING – 10,000

CIR. NO.	BKR	DESCRIPTION	LOAD VA	CIR. NO.	BKR	DESCRIPTION	LOAD VA
1	20/1	Garbage Disposal	750	2	20/1	Combo Washer/Dryer	1500
3	20/1	Gas Stove	1500	4	20/1	Laundry Room Recept.& Ltg.	580
5	20/1	Kitchen Conv. Outlets	360	6	20/2	A/C Unit	3225
7	20/1	Refrigerator	750	8			
9	20/1	Kitchen Conv. Outlets & Ltg.	840	10	20/1	Living Rm. Recept & Ext.Ltg.	820
11	20/1	Living Room Recept & Ltg.	1660	12	20/1	Bathroom Recept., Ltg.& Fan	580
13	20/1	Bed/Closet Ltg. & Recept.	820	14	20/1	Dishwasher	1200
15	20/1	Bathroom Recept., Ltg.& Fan	750	16	20/1	Furnace	810
17	20/1	Water Heater	500	18	20/1	Spare	
19	20/1	Spare		20	20/1	Spare	
21	20/1	Spare		22	20/1	Spare	
23		Space		24		Space	

TOTAL CONNECTED LOAD 16.625 KVA 80.0 AMPS

TP-UNIT20

LOCATION – Loft Unit 20

VOLTAGE, PHASE, WIRE – 120/208V, 1PH, 3W — BKR. TYPE – BOLT ON
MAIN BREAKER – 150A — AIC RATING – 10,000

CIR. NO.	BKR	DESCRIPTION	LOAD VA	CIR. NO.	BKR	DESCRIPTION	LOAD VA
1	20/1	Garbage Disposal	750	2	20/1	Combo Washer/Dryer	1500
3	20/1	Gas Stove	1500	4	20/1	Closet Recp.& Ltg.	500
5	20/1	Kitchen Conv. Outlets	360	6	20/2	A/C Unit	3225
7	20/1	Refrigerator	750	8			
9	20/1	Kitchen Conv. Outlets & Ltg.	1070	10	20/1	Living Rm. Recept & Ext.Ltg.	750
11	20/1	Living Room Recept & Ltg.	1180	12	20/1	Bathroom Recept., Ltg.& Fan	580
13	20/1	Bed Ltg. & Recept./Ext. Ltg.	820	14	20/1	Dishwasher	1200
15	20/1	Bathroom Recept., Ltg.& Fan	750	16	20/1	Furnace	500
17	20/1	Water Heater	500	18	20/1	Spare	
19	20/1	Spare		20	20/1	Spare	
21	20/1	Spare		22	20/1	Spare	
23		Space		24		Space	

TOTAL CONNECTED LOAD 15.915 KVA 76.6 AMPS

TP-UNIT21

LOCATION – Loft Unit 21

VOLTAGE, PHASE, WIRE – 120/208V, 1PH, 3W — BKR. TYPE – BOLT ON
MAIN BREAKER – 150A — AIC RATING – 10,000

CIR. NO.	BKR	DESCRIPTION	LOAD VA	CIR. NO.	BKR	DESCRIPTION	LOAD VA
1	20/1	Garbage Disposal	750	2	20/1	Combo Washer/Dryer	1500
3	20/1	Gas Stove	1500	4	20/1	Laundry/Closet Recp.& Ltg.	500
5	20/1	Kitchen Conv. Outlets	360	6	60/2	A/C Unit	7780
7	20/1	Refrigerator	750	8			
9	20/1	Kitchen Conv. Outlets & Ltg.	1020	10	20/1	Living Rm. Recept & Ext.Ltg.	1020
11	20/1	Living Rm. Recept. & Ltg.	820	12	20/1	Bathroom Recept., Ltg.& Fan	580
13	20/1	Living/Closet Recep. & Ltg.	840	14	20/1	Dishwasher	1200
15	20/1	Bathroom Recept., Ltg.& Fan	750	16	20/1	Furnace	1644
17	20/1	Water Heater	500	18	20/1	Mezzanine Recept. & Ltg.	740
19	20/1	Spare		20	20/1	Spare	
21	20/1	Spare		22	20/1	Spare	
23	20/1	Spare		24	20/1	Spare	
25		Space		26		Space	
27		Space		28		Space	
29		Space		30		Space	

TOTAL CONNECTED LOAD 22.054 KVA 106.1 AMPS

TP-UNIT_

LOCATION – Loft Units 22,23,24

VOLTAGE, PHASE, WIRE – 120/208V, 1PH, 3W — BKR. TYPE – BOLT ON
MAIN BREAKER – 150A — AIC RATING – 10,000

CIR. NO.	BKR	DESCRIPTION	LOAD VA	CIR. NO.	BKR	DESCRIPTION	LOAD VA
1	20/1	Garbage Disposal	750	2	20/1	Combo Washer/Dryer	1500
3	20/1	Gas Stove	1500	4	20/1	Laundry Recpt. & Ltg.	560
5	20/1	Kitchen Conv. Outlets	360	6	40/2	A/C Unit	5615
7	20/1	Refrigerator	750	8			
9	20/1	Kitchen Recept. & Ltg.	1020	10	20/1	Living Rm. Recept & Ext.Ltg.	920
11	20/1	Living Room Recept & Ltg.	880	12	20/1	Bathroom Recept., Ltg.& Fan	580
13	20/1	Bed/Closet Recept. & Ltg.	820	14	20/1	Dishwasher	1200
15	20/1	Bathroom Recept., Ltg.& Fan	750	16	20/1	Furnace	1212
17	20/1	Water Heater	500	18	20/1	Mezzanine Recept. & Ltg.	1000
19	20/1	Mezzanine Recept. & Ltg.	720	20	20/1	Spare	
21	20/1	Spare		22	20/1	Spare	
23	20/1	Spare		24	20/1	Spare	

TOTAL CONNECTED LOAD 20.617 KVA 99.2 AMPS

TP-UNIT25

LOCATION – Loft Unit 25

VOLTAGE, PHASE, WIRE – 120/208V, 1PH, 3W — BKR. TYPE – BOLT ON
MAIN BREAKER – 150A — AIC RATING – 10,000

CIR. NO.	BKR	DESCRIPTION	LOAD VA	CIR. NO.	BKR	DESCRIPTION	LOAD VA
1	20/1	Garbage Disposal	750	2	20/1	Combo Washer/Dryer	1500
3	20/1	Gas Stove	1500	4	20/1	Laundry Recpt. & Ltg.	560
5	20/1	Kitchen Conv. Outlets	360	6	50/2	A/C Unit	6635
7	20/1	Refrigerator	750	8			
9	20/1	Kitchen Recept. & Ltg.	1020	10	20/1	Living Rm. Recept & Ext.Ltg.	920
11	20/1	Living Room Recept & Ltg.	860	12	20/1	Bathroom Recept., Ltg.& Fan	580
13	20/1	Bed/Closet Recept. & Ltg.	820	14	20/1	Dishwasher	1200
15	20/1	Bathroom Recept., Ltg.& Fan	750	16	20/1	Furnace	1644
17	20/1	Water Heater	500	18	20/1	Mezzanine Recept. & Ltg.	1000
19	20/1	Mezzanine Recept. & Ltg.	720	20	20/1	Spare	
21	20/1	Spare		22	20/1	Spare	
23	20/1	Spare		24	20/1	Spare	

TOTAL CONNECTED LOAD 22.089 KVA 106.2 AMPS

TP-UNIT26

LOCATION – Loft Unit 26

VOLTAGE, PHASE, WIRE – 120/208V, 1PH, 3W — BKR. TYPE – BOLT ON
MAIN BREAKER – 150A — AIC RATING – 10,000

CIR. NO.	BKR	DESCRIPTION	LOAD VA	CIR. NO.	BKR	DESCRIPTION	LOAD VA
1	20/1	Garbage Disposal	750	2	20/1	Combo Washer/Dryer	1500
3	20/1	Gas Stove	1500	4	20/1	Laundry Recpt. & Ltg.	560
5	20/1	Kitchen Conv. Outlets	360	6	60/2	A/C Unit	7780
7	20/1	Refrigerator	750	8			
9	20/1	Kitchen Recept. & Ltg.	1020	10	20/1	Living Rm. Recept & Ext.Ltg.	920
11	20/1	Living Room Recept & Ltg.	860	12	20/1	Bathroom Recept., Ltg.& Fan	580
13	20/1	Bed/Closet Recept. & Ltg.	820	14	20/1	Dishwasher	1200
15	20/1	Bathroom Recept., Ltg.& Fan	750	16	20/1	Furnace	1644
17	20/1	Water Heater	500	18	20/1	Mezzanine Recept. & Ltg.	1000
19	20/1	Mezzanine Recept. & Ltg.	720	20	20/1	Spare	
21	20/1	Spare		22	20/1	Spare	
23	20/1	Spare		24	20/1	Spare	

TOTAL CONNECTED LOAD 23.214 KVA 111.7 AMPS

TP-UNIT_

LOCATION – Loft Units 27,28,29

VOLTAGE, PHASE, WIRE – 120/208V, 1PH, 3W — BKR. TYPE – BOLT ON
MAIN BREAKER – 150A — AIC RATING – 10,000

CIR. NO.	BKR	DESCRIPTION	LOAD VA	CIR. NO.	BKR	DESCRIPTION	LOAD VA
1	20/1	Garbage Disposal	750	2	20/1	Combo Washer/Dryer	1500
3	20/1	Gas Stove	1500	4	20/1	Laundry Recpt. & Ltg.	560
5	20/1	Kitchen Conv. Outlets	360	6	30/2	A/C Unit	4450
7	20/1	Refrigerator	750	8			
9	20/1	Kitchen Recept. & Ltg.	1020	10	20/1	Living Rm. Recept & Ext.Ltg.	920
11	20/1	Living Room Recept & Ltg.	860	12	20/1	Bathroom Recept., Ltg.& Fan	580
13	20/1	Bed/Closet Recept. & Ltg.	820	14	20/1	Dishwasher	1200
15	20/1	Bathroom Recept., Ltg.& Fan	750	16	20/1	Furnace	1212
17	20/1	Water Heater	500	18	20/1	Mezzanine Recept. & Ltg.	1000
19	20/1	Mezzanine Recept. & Ltg.	720	20	20/1	Spare	
21	20/1	Spare		22	20/1	Spare	
23	20/1	Spare		24	20/1	Spare	

TOTAL CONNECTED LOAD 19.452 KVA 93.6 AMPS

TP-UNIT30

LOCATION – Loft Unit 30

VOLTAGE, PHASE, WIRE – 120/208V, 1PH, 3W — BKR. TYPE – BOLT ON
MAIN BREAKER – 150A — AIC RATING – 10,000

CIR. NO.	BKR	DESCRIPTION	LOAD VA	CIR. NO.	BKR	DESCRIPTION	LOAD VA
1	20/1	Garbage Disposal	750	2	20/1	Combo Washer/Dryer	1500
3	20/1	Gas Stove	1500	4	20/1	Closet Recp.& Ltg.	560
5	20/1	Kitchen Conv. Outlets	360	6	30/2	A/C Unit	4450
7	20/1	Refrigerator	750	8			
9	20/1	Kitchen Recept. & Ltg.	550	10	20/1	Living Rm. Recept & Ext.Ltg.	380
11	20/1	Living Room Recept & Ltg.	860	12	20/1	Bathroom Recept., Ltg.& Fan	580
13	20/1	Bed Ltg. & Recept./Ext. Ltg.	1260	14	20/1	Dishwasher	1200
15	20/1	Bed/Closet Recept. & Ltg.	820	16	20/1	Furnace	1212
17	20/1	Water Heater	500	18	20/1	Mezzanine Recept. & Ltg.	900
19	20/1	Spare		20	20/1	Mezzanine Recept. & Ltg.	900
21	20/1	Spare		22	20/1	Spare	
23	20/1	Spare		24	20/1	Spare	

TOTAL CONNECTED LOAD 19.032 KVA 91.5 AMPS

LRP-HA

LOCATION – ELEC. ROOM (2nd Floor)

VOLTAGE, PHASE, WIRE – 120/208V, 3PH, 4W — BKR. TYPE – BOLT ON
MAIN BREAKER – 200A M.L.O. — MTG – SURFACE — AIC RATING – 10,000

CIR. NO.	BKR	DESCRIPTION	REC. VA	LTG VA	MISC. VA	CIR. NO.	BKR	DESCRIPTION	REC VA	LTG VA	MISC. VA
1	20/1	1st Floor Corr. lighting		1320		2	20/1	Wash stair lighting		300	
3	20/1	Bldg. mounted lighting		1325		4	20/1	2nd Floor Corr. Lighting		850	
5	20/1	Garage lighting		500		6	20/1	Storage, elec. Rm. Lighting		780	
7	20/1	3rd Floor Corr. lighing		850		8	20/1	Garage receptacles	1500		
9	20/1	1st Floor Corr. Receptacles	1260			10	20/1	Garage receptacles	1500		
11	20/1	1st Floor Corr. Receptacles	1080			12	20/1	Garage receptacles	1500		
13	30/2	PTAC-1			4500	14	20/1	Garage receptacles	1500		
15						16	20/1	Garage receptacles	1500		
17	30/2	EWH-1			3600	18	20/1	Elev. Pit light and receptacle	180	100	
19						20	20/1	Elev. Mach. Rm. Light, rec/fan	180	85	320
21	20/2	EWH-2,3			3000	22	20/1	Elev cab light and fan		200	200
23						24	20/1	2nd Floor storage/elec rec.	900		
25	20/2	EWH-4			3000	26	20/1	2nd Floor corr. Receptacles	1080		
27						28	20/1	3rd Floor corr. Receptacles	1080		
29	20/1	Spare				30	20/1	Roof receptacles	1080		
31	20/1	Spare				32	20/1	Spare			
33	20/1	Spare				34	20/1	Spare			
35	20/1	Spare				36	20/1	Spare			
37	20/1	Spare				38	20/1	Spare			
39	20/1					40	20/1				
41	20/1					42	20/1				

TOTAL RECEPTACLES	14.3 KVA	39.7 AMP
TOTAL LIGHTING	6.5 KVA	18.0 AMP
TOTAL MISCELLANEOUS	14.6 KVA	40.5 AMP
TOTAL DEMAND	34.9 KVA	96.7 AMP

NEUMANN SMITH & ASSOCIATES

Architecture
Planning
Interior Design

400 Galleria Officentre
Suite 555
Southfield, Michigan 48034

248-352-8310
FAX 248-352-1821
NS@neumannsmith.com

Metro Lofts

Royal Oak, Michigan

Consultant

ETS ENGINEERING, INC.
ENERGY / TECHNOLOGY SOLUTIONS
4181 S. WASHINGTON
P.O. Box 116
ROYAL OAK, MI 48068-1116
OFF: 248-744-0360
FAX: 248-744-0367

Seal

STATE OF MICHIGAN
DOUGLAS M. SMITH
No. 38685
REGISTERED PROFESSIONAL ENGINEER

SEAL IS VALID ONLY IF SIGNED BY THE ENGINEER NAMED.

Revisions

MAY 28, 2004 – CONSTRUCTION & PERMIT

Date
10-14-2003
Drawn
P.S.
Checked
D.S.
Approved

■ Preliminary
☐ Construction
☐ Record

Do not scale
Use figured dimensions only
Copyright © 2003

Bidpak Number

Job Number
23091
Title
Panel Schedules

Scale: 1/8" = 1'-0"

Sheet
E601

ELECTRICAL SPECIFICATIONS:

SECTION 16050 – GENERAL ELECTRICAL REQUIREMENTS

PART 1 GENERAL

1.1 SECTION INCLUDES
A. Drawings and general provisions of the Contract, including General and Supplementary Conditions and Division 1 Specification Sections, apply to this and other Electrical Specification Sections that follow this section.

1.2 SECTION INCLUDES
A. Trade Electrical Requirements specifically applicable to Division 16 Sections.

1.3 WORK SEQUENCE
A. Install work to accommodate Owner's process and occupancy requirements. During the construction period, coordinate electrical schedule and operations with Owner.

1.4 REFERENCES
A. ANSI/NFPA 70 National Electrical Code, U.S. Bowling Corporation.

1.5 SUBMITTALS
A. Submit shop drawings and product data for major equipment where indicated on drawings or in the specifications.

1.6 REGULATORY REQUIREMENTS
A. Conform to City Building Code.
B. Electrical: Conform to NFPA 70.
C. Obtain permits, and request inspections from The City.
D. Furnish products listed and classified by Underwriters Laboratories, Inc. as suitable for purpose specified and as shown on drawings.

1.7 PROJECT/SITE CONDITIONS: verified
A. Install Work in locations shown on Drawings, unless prevented by Project conditions

SECTION 16060 – GROUNDING AND BONDING

PART 1 GENERAL

1.1 SECTION INCLUDES
A. Equipment grounding conductors.
B. Bonding.
C. Ground Rods

PART 2 PRODUCTS

2.1 MECHANICAL CONNECTORS
A. Material: Bronze

2.2 EXOTHERMIC CONNECTIONS
A. Manufacturers:
1. Cadweld.
2. Substitutions: As approved by the Engineer.

2.3 WIRE
A. Material: Stranded copper unless indicated otherwise on drawings.

2.4 GROUND RODS
A. Material: Copper clad steel, 3/4 inch dia, 10 Feet long.

PART 3 EXECUTION

3.1 EXAMINATION
A. Verify that the final backfill and compaction has been completed before driving rod electrodes.
B. If necessary, furnish and install additional ground rods to achieve 10 ohms or less at the service entrance equipment.

3.2 INSTALLATION
A. Install Products in accordance with manufacturer's instructions.
B. Provide bonding to meet Regulatory Requirements.
C. Install all type MC and MNC cables with an equipment ground conductor.
D. Equipment Grounding Conductor: Provide separate, insulated conductor within each feeder and branch circuit raceway. Terminate each end on an suitable lug, bus, or bushing bock at the power source.

SECTION 16075 – ELECTRICAL IDENTIFICATION

PART 1 GENERAL

1.1 SECTION INCLUDES
A. Drawings and general provisions of the Contract, including General and Supplementary Conditions and Division 1 Specification Sections, apply to this Section.

1.2 SECTION INCLUDES
A. This Section includes electrical identification materials and devices required to comply with ANSI C2, NFPA 70, OSHA standards, and authorities having jurisdiction.

PART 2 PRODUCTS

2.1 RACEWAY AND CABLE LABELS
A. Comply with ANSI A13.1, Table 3, for minimum size of letters for legend and for minimum length of color field for each raceway and cable size.
1. Color: Black letters on orange field.
2. Legend: Indicate "voltage."
B. Adhesive Labels: Preprinted, flexible, self-adhesive vinyl with legend overlaminated with a clear, weather- and chemical-resistant coating.
C. Underground-Line Warning Tape: Permanent, bright-colored, continuous-printed, vinyl tape.
1. Not less than 6 inches wide by 4 mils thick (152 mm wide by 0.102 mm thick).
2. Compounded for permanent direct-burial service.
3. Embedded continuous metallic strip or core.
4. Printed legend indicating type of underground line.
D. Tape Markers: Vinyl or vinyl-cloth, self-adhesive, wraparound type with preprinted numbers and letters.

2.2 NAMEPLATES AND SIGNS
A. Safety Signs: Comply with 29 CFR, Chapter XVII, Part 1910.145.
B. Engraved Plastic Nameplates and Signs: Engraving stock, melamine plastic laminate, minimum 1/16 inch (1.6 mm) thick for signs up to 20 sq. in. (129 sq. cm) and 1/8 inch (3.2 mm) thick for larger sizes.
1. Engraved legend with black letters on white face.
2. Punched or drilled for mechanical fasteners.

PART 3 – EXECUTION

3.1 INSTALLATION
A. Identification Materials and Devices: Install at locations for most convenient viewing without interference with operation and maintenance of equipment.
B. Lettering, Colors, and Graphics: Coordinate names, abbreviations, colors, and other designations with corresponding designations in the Contract Documents or with those required by codes and standards. Use consistent designations throughout Project.
C. Sequence of Work: If identification is applied to surfaces that require finish, install identification after completing finish work.
D. Self-Adhesive Identification Products: Clean surfaces before applying.
E. Color Banding: Raceways and Exposed Cables: Band exposed and accessible raceways of the systems listed below:
1. Apply the following colors to the systems listed below:
a. Fire Alarm System: Red.
b. Fire-Suppression Supervisory and Control System: Red and yellow.
c. Combined Fire Alarm and Security System: Red and blue.
d. Security System: Blue and yellow.
e. Mechanical and Electrical Supervisory System: Green and blue.
f. Telecommunication System: Green and yellow.
F. Caution Labels for Indoor Boxes and Enclosures for Power and Lighting: Install pressure-sensitive, self-adhesive labels identifying system voltage with black letters on orange background. Install on exterior of door or cover.
G. Paths of Underground Electrical Lines: During trench backfilling, for exterior underground power, control, signal, and communication lines, install continuous underground plastic line marker located directly above line at 6 to 8 inches (150 to 200 mm) below finished grade. Where width of multiple lines installed in a common trench or concrete envelope does not exceed 16 inches (400 mm) overall, use a single line marker. (Limit use of line markers to direct-buried cables).
H. Secondary Service, Feeder, and Branch-Circuit Conductors: Color-code throughout the secondary electrical system.
1. Color-code 208/120-V system as follows:
a. Phase A: Black.
b. Phase B: Red.
c. Phase C: Blue.
d. Neutral: White.
e. Ground: Green.
f. Color-code 480/277-V system as follows:
a. Phase A: Brown.
b. Phase B: Yellow.
c. Phase C: Orange.
d. Neutral: Red.
e. Ground: Green/Yellow.
I. Apply identification to conductors as follows:
1. Multiple Control and Communication Circuits in the Same Enclosure: Identify each conductor by its system and circuit designation. Use a consistent system of tags, color-coding, or cable marking tape.
J. Apply warning, caution, and instruction signs as follows:
1. Warnings, Cautions, and Instructions: Install to ensure safe operation and maintenance of electrical systems and of items to which they connect. Install engraved plastic-laminated instruction signs with approved legend where instructions are needed for system or equipment operation. Install metal-backed butterfly signs for outdoor items.
K. Equipment Identification Labels: Engraved plastic laminate, install on each unit of equipment, including control or master unit of each system. This includes power, lighting, communication, signal, and alarm systems, unless units are specified with their own self-explanatory identification. Unless otherwise indicated, provide a single line of text with 1/2-inch- (13-mm-) high lettering on 1-1/2-inch- (38-mm-) high label; where two lines of text are required, use labels 2 inches (50 mm) high. Use white lettering on black field. Apply labels for each unit of the following categories of equipment using mechanical fasteners:
1. Panelboards, electrical cabinets, and enclosures.
2. Access doors and panels for concealed electrical items.
3. Disconnect switches.
4. Enclosed circuit breakers.
5. Motor starters.
6. Push-button stations.
7. Remote-controlled switches.
8. Dimmers.
9. Control devices.
10. Transformers.
11. Telephone switching equipment.
12. Fire alarm master station or control panel.

SECTION 16120 – CONDUCTORS AND CABLES

PART 1 GENERAL

1.1 SECTION INCLUDES
A. Building wire and cable.
B. Underground feeder and branch circuit cable.
C. Service entrance cable.
D. Wiring connections and connectors.

1.2 RELATED SECTIONS
A. Section 16130A – Raceways.
B. Section 16130B – Boxes.
C. Section 16075 – Electrical Identification.

1.3 PROJECT CONDITIONS
A. Verify that field measurements are as shown on Drawings where applicable.
B. Where wire and cable routing is not shown, and destination only is indicated, determine exact routing and lengths required based on voltage drop limitations per NEC.

1.4 COORDINATION
A. Determine required separation between cable and other work.
B. Determine cable routing to avoid interference with other work.

PART 2 PRODUCTS

2.1 BUILDING WIRE AND CABLE
A. Description: Stranded conductor insulated wire.
B. Conductor: Copper, 600 Volts, Type THHN/THWN or XHHW for 120 Volt lighting and receptacle circuits.

PART 3 EXECUTION

3.1 EXAMINATION
A. Verify that interior of building has been protected from weather.
B. Verify that mechanical work likely to damage wire and cable has been completed.

3.2 PREPARATION
A. Completely and thoroughly swab raceway before installing wire.

3.3 WIRING METHODS
A. Use wiring methods indicated on Drawings.

3.4 INSTALLATION
A. Install products in accordance with manufacturers instructions.
B. Use stranded conductors for control circuits.
C. Use conductor not smaller than 12 AWG for power and lighting circuits.
D. Use conductor not smaller than 14 AWG for control circuits.
E. Pull all conductors into raceway at same time.
F. Use suitable wire pulling lubricant for building wire 4 AWG and larger.
G. Protect exposed cable from damage.
H. Support cables above accessible ceiling, using spring metal clips or plastic cable ties to support cables from structure. Do not rest cable on ceiling panels.
I. Use suitable cable fittings and connectors.
J. Neatly train and lace wiring inside boxes, equipment, and panelboards.
K. Clean conductor surfaces before installing lugs and connectors.
L. Make splices, and terminations to carry full ampacity of conductors with no perceptible temperature rise.
M. Use mechanical connectors for copper conductor splices and taps, 6 AWG and larger. Tape uninsulated conductors and connector with electrical tape to 150 percent of insulation rating of conductor.
N. Use solderless pressure connectors with insulating covers for copper conductor splices and taps, 8 AWG and larger.
O. Use insulated spring wire connectors with plastic caps for copper conductor splices and taps, 10 AWG and smaller.

3.5 BRANCH CIRCUITS WIRING
A. At 120 volts, single phase, 20 Amp branch circuits wiring exceeding 120 linear feet, minimum #10 or larger conductors to allow for voltage drop in accordance with NEC requirements.

SECTION 16130A – RACEWAYS

PART 1 GENERAL

1.1 SECTION INCLUDES
A. Metal conduit.
B. Flexible metal conduit.
C. Liquidtight flexible metal conduit.
D. Electrical metallic tubing.
E. Fittings and conduit bodies.

1.2 PROJECT CONDITIONS
A. Conduit routing is shown on Drawings at approximate locations unless dimensioned. Route as required to complete wiring system. All conduits in the finished area shall be installed concealed in the walls, under recessed floors and ceiling space.

PART 2 PRODUCTS

2.1 CONDUIT REQUIREMENTS
A. Minimum Size: 1/2 inch unless otherwise specified.
B. Underground Installations:
1. More than Five Feet from Foundation Wall: Use rigid steel conduit, intermediate metal conduit, or listed nonmetallic conduit.
C. Outdoor Locations, Above Grade: Use rigid steel conduit, intermediate metal conduit, plastic coated conduit and fabricated nonmetallic conduit.
D. Wet and Damp Locations: Use rigid steel conduit, intermediate metal conduit, electrical metallic tubing and fabricated nonmetallic conduit.
E. Dry Locations (Finished areas only): 1. Concealed or Exposed: Use rigid steel conduit, intermediate metal conduit, electrical metallic tubing, flexible steel conduit.
F. Equipment connections: Final connection to equipment shall be made with liquid tight flexible steel conduit.

PART 3 EXECUTION

3.1 INSTALLATION
A. Install conduit in accordance with NECA "Standard of Installation."
B. Install nonmetallic conduit in accordance with manufacturer's instructions.
C. Arrange supports to prevent misalignment during wiring installation.
D. Support conduit using coated steel or malleable iron straps, lay-in adjustable hangers, clevis hangers, and rigid hangers.
E. Group related conduits; support using conduit rack. Construct rack using steel channel; provide space on each for 25 percent additional conduits.
F. Fasten conduit supports to building structure and surfaces.
G. Do not support conduit with wire or perforated pipe straps. Remove wire used for temporary supports.
H. Do not attach conduit to ceiling support wires.
I. Arrange conduit to maintain headroom and present neat appearance.
J. Route exposed conduit (only in the non finished areas) parallel and perpendicular to walls.
K. Route conduit installed above accessible ceilings parallel and perpendicular to walls.
L. Maintain adequate clearance between conduit and piping.
M. Maintain 12 inch clearance between conduit and surfaces with temperatures exceeding 104 degrees F.
N. Cut conduit square using saw or pipecutter; de-burr cut ends.
O. Bring conduit to shoulder of fittings; fasten securely.
P. Join nonmetallic conduit using cement as recommended by manufacturer. Wipe nonmetallic conduit dry and clean before joining. Apply full even coat of cement to entire area inserted in fitting. Allow joint to cure for 20 minutes, minimum.
Q. Use conduit hubs or sealing locknuts to fasten conduit to sheet metal boxes in damp and wet locations and to cast boxes.
R. Install no more than equivalent of three 90-degree bends between boxes. Use conduit bodies to make sharp changes in direction, as around beams. Use – hydraulic one shot bender or factory elbows for bends in metal conduit larger than 2 inch size. For telephone and data cables installations, use no more than (2) 90 degree bends which shall be made in the field with one shot hydraulic bender.
S. Avoid moisture traps; provide junction box with drain fitting at low points in conduit system.
T. Provide suitable fittings to accommodate expansion and deflection where conduit crosses control and expansion joints where applicable.
U. Provide suitable pull string in each empty conduit except sleeves and nipples.
V. Ground and bond conduit per NEC where required.

3.2 INTERFACE WITH OTHER PRODUCTS
A. Install conduit to preserve fire resistance rating of partitions and other elements, using materials and methods as required.

SECTION 16130B – BOXES

PART 1 GENERAL

1.1 SECTION INCLUDES
A. Wall and ceiling outlet boxes.
B. Pull and junction boxes.

1.2 PROJECT CONDITIONS
A. Verify field measurements as shown on Drawings.
B. Electrical boxes are shown on Drawings in approximate locations unless dimensioned. Install at location required for box to serve intended purpose.

PART 2 PRODUCTS

2.1 OUTLET BOXES
A. Sheet Metal Outlet Boxes: ANSI/NEMA OS 1, galvanized steel.
1. Luminaire and Equipment Supporting Boxes: Rated for weight of equipment supported; include 1/2 inch male fixture studs where required.
2. Concrete Ceiling Boxes: Concrete type.
B. Nonmetallic Outlet Boxes: ANSI/NEMA OS 2.
C. Cast Boxes: NEMA FB 1, Type FD, aluminum or cast ferroloy. Provide gasketed cover by box manufacturer. Provide threaded hubs.
D. Outlet boxes located outdoors shall be Cast Boxes.

2.2 PULL AND JUNCTION BOXES
A. Sheet Metal Boxes: NEMA OS 1, galvanized steel.
B. Surface-Mounted Cast Metal Box: NEMA 250, Type 4; Raintight, surface mounted junction box.
1. Material: Galvanized cast iron or Cast aluminum.
2. Cover: Furnish with ground flange, neoprene gasket, and stainless steel cover screws.
C. Boxes located outdoors shall be NEMA 3R with removable screw in cover.

PART 3 EXECUTION

3.1 INSTALLATION
A. Install electrical boxes as shown on Drawings, and as required for splices, taps, connections and compliance with regulatory wire pulling, equipment con requirements.
B. Install pull boxes and junction boxes above accessible ceilings and in unfinished areas only.
C. Inaccessible Ceiling Areas: Install outlet and junction boxes no more than 6 inches from ceiling access panel or from removable recessed luminaire.

3.2 INTERFACE WITH OTHER PRODUCTS
A. Locate flush mounting box in masonry wall to require cutting of masonry unit corner only. Coordinate masonry cutting to achieve neat opening.
B. Coordinate mounting heights and locations of outlets mounted above counters, benches and backsplashes.
C. Position outlet boxes to locate luminaires as shown on reflected ceiling plan.

SECTION 16180 – SUPPORTING DEVICES

PART 1 GENERAL

1.1 SECTION INCLUDES
A. Conduit and equipment supports.
B. Anchors and fasteners.

PART 2 PRODUCTS

2.1 PRODUCT REQUIREMENTS
A. Materials and Finishes: Provide adequate corrosion resistance.
B. Provide materials, sizes, and types of anchors, fasteners and supports to carry the loads of equipment and conduit. Consider weight of wire in conduit when selecting products.

2.2 STEEL CHANNEL
A. Description: Galvanized.

PART 3 EXECUTION

3.1 INSTALLATION
A. Install products in accordance with manufacturer's instructions.
B. Provide anchors, fasteners, and supports in accordance with NECA "Standard of Installation".
C. Do not fasten supports to pipes, ducts, mechanical equipment, and conduit.
D. Do not use spring steel clips and clamps.
E. Obtain permission from Architect/Engineer before drilling or cutting structural members.
F. Fabricate supports from structural steel or steel channel. Rigidly weld members or use hexagon head bolts to present neat appearance with adequate strength and rigidity. Use spring lock washers under all bolts.
G. Install surface mounted cabinets and panelboards with minimum of four anchors.
H. In wet and damp locations (all non-office areas) use steel channel supports to stand cabinets and panelboards one inch off wall.
I. Use sheet metal channel to bridge studs above and below cabinets and panelboards recessed in hollow partitions.

SECTION 16140 – WIRING DEVICES

PART 1 GENERAL

1.1 SECTION INCLUDES
A. Wall switches.
B. Receptacles.
C. Wall plates and decorative box covers as approved by the Architect/Engineer.

1.2 QUALIFICATIONS
A. Manufacturer: Company specializing in manufacturing products specified in this Section with minimum five years experience.

PART 2 PRODUCTS

2.1 WALL SWITCHES
A. Manufacturers:
1. Leviton
2. Hubbell.
3. Arrow – Hart
4. Eagle.
B. Description: NEMA WD 1, heavy-duty, AC only horsepower rated toggle switch.
C. Device Body: Gray plastic with toggle handle and as approved by the architect.
D. Voltage Rating: 120–277V AC; 1 HP @ 120V AC.
E. Current Rating: 20 amperes.
F. Ratings: Match branch circuit and load characteristics.

2.2 RECEPTACLES
A. Manufacturers:
1. Leviton
2. Arrow – Hart
3. Hubbell.
4. Eagle.
B. Description: NEMA WD 1; heavy-duty general-use receptacle.
C. Device Body: Gray plastic and as approved by the architect.
D. Configuration: NEMA WD 6; type as specified and indicated.
E. Convenience Receptacle: NEMA Type 5–20R where shown.
F. GFCI Receptacle: Convenience receptacle with integral ground fault circuit. interrupter to meet regulatory requirements.

2.3 WALL PLATES
A. Cover Plates:
1. Arrow – Hart
2. Eagle.
3. Hubbell.
4. Leviton.
B. Color: Brushed Stainless Steel and as approved by the architect.
C. Weatherproof Cover Plate: Gasketed polycarbonate enclosure that is raintight while in use.

3.3 EXECUTION
A. Install panelboards and accessory items according to NEMA PB 1.1.
B. Install filler plates in unused spaces.
C. Wiring in Panelboard Gutters: Arrange conductors into groups, and bundle and wrap with wire ties after completing load balancing.
D. Identify field-installed wiring and components and provide warning signs as specified in Division 16 Section "Basic Electrical Materials and Methods."
E. Panelboard Nameplates: Label each panelboard with engraved laminated-plastic or metal nameplates mounted with corrosion-resistant screws.
F. Provide ground continuity to main electrical ground bus as indicated.
G. Tighten electrical connectors and terminals, including grounding connections, according to manufacturer's published torque-tightening values. Where manufacturer's torque values are not indicated, use those specified in UL 486A and UL 486B.
H. Field Quality Control: Perform acceptance tests as follows:
1. Make insulation-resistance tests of each panelboard bus, component, and connecting supply, feeder, and control circuits.
2. Make continuity tests of each circuit.
3. Procedures: Perform each visual and mechanical inspection and electrical test stated in NETA ATS.

SECTION 16475 – FUSES

PART 1 GENERAL

1.1 SUBMITTALS
A. Submittals: Submit Product Data according to the Conditions of the Contract and Division 1 Specification Sections.
B. Comply with NFPA 70 for components and installation.

1.2 PRODUCTS
A. Cartridge Fuses: NEMA FU 1, nonrenewable cartridge fuse; class as specified or indicated; current rating as indicated; voltage rating consistent with circuit voltage.

1.3 EXECUTION
A. Examine utilization equipment nameplates and installation instructions to verify proper fuse locations, sizes, and characteristics.
B. Main Service: Class L, fast acting.
C. Main Feeders: Class L, time delay.
D. Motor Branch Circuits: Class RK1, time delay.
E. Other Branch Circuits: Class RK5, non–time delay.
F. Install fuses in flexible devices as indicated. Arrange fuses so fuse ratings are readable without removing fuse.
G. Install spare fuse cabinet where indicated.
H. Install typewritten labels on inside door of each fused switch to indicate fuse replacement information.

SECTION 16476 – DISCONNECT SWITCHES AND CIRCUIT BREAKERS

PART 1 GENERAL

1.1 SUBMITTALS
A. Submittals: Submit Product Data for disconnect switches, circuit breakers, and accessories according to the Conditions of the Contract and Division 1 Specification Sections.
B. Comply with NFPA 70 for components and installation.
C. Listing and Labeling: Provide disconnect switches and circuit breakers specified in this Section that are UL listed and labeled.

PART 2 PRODUCTS

2.1 WALL SWITCHES
A. Manufacturers:
1. Leviton
2. Hubbell.
3. Arrow – Hart
4. Eagle.
B. Description: NEMA WD 1; heavy-duty, AC only horsepower rated toggle switch.
C. Device Body: Gray plastic and as approved by the architect.
D. Configuration: NEMA WD 6; type as specified and indicated.
E. Convenience Receptacle: NEMA Type 5–20R where shown.
F. GFCI Receptacle: Convenience receptacle with integral ground fault circuit. interrupter to meet regulatory requirements.

2.3 WALL PLATES
A. Cover Plates:
1. Arrow – Hart
2. Eagle.
3. Hubbell.
4. Leviton.
B. Color: Brushed Stainless Steel and as approved by the architect.
C. Weatherproof Cover Plate: Gasketed polycarbonate enclosure that is raintight while in use.

PART 3 EXECUTION

3.1 EXAMINATION
A. Verify outlet boxes are installed at proper height.
B. Verify wall openings are neatly cut and will be completely covered by wall plates.
C. Verify branch circuit wiring installation is completed, tested, and ready for connection to wiring devices.

3.2 PREPARATION
A. Clean debris from outlet boxes.

3.3 INSTALLATION
A. Install products in accordance with manufacturer's in structions.
B. Install devices plumb and level.
C. Install switches with OFF position down.
D. Install receptacles with grounding pole on bottom.
E. Connect wiring device grounding terminal to branch circuit equipment grounding conductor.
F. Connect wiring devices by wrapping conductor around screw terminal or push–in back wired openings.
G. Connect wiring devices by wrapping conductor around screw terminal or push–in back wired openings.
H. Use jumbo size plates for outlets installed in masonry walls.
I. Install prefabricated steel plates on outlet boxes and junction boxes in unfinished areas, above accessible ceilings, and on surface mounted outlets.
J. Install protective caps on active flush cover service fittings.

3.4 INTERFACE WITH OTHER PRODUCTS
A. Install wall switch 48 inches above finished floor.
B. Install convenience receptacle 18 inches above finished floor.
C. Install convenience receptacle 6 to 8 inches above counter top where applicable.
D. Install telephone jack 18 inches above finished floor.
E. Install telephone jack per wall telephone 59 inches above finished floor.
F. Install wall switches and convenience receptacles per Michigan and National ADA requirements in the barrier free units.
2. Access doors and panels for concealed electrical items.
3. Disconnect switches.
4. Enclosed circuit breakers.
5. Motor starters.
6. Push–button stations.
7. Remote–controlled switches.
8. Dimmers.
9. Control devices.
10. Transformers.
11. Telephone switching equipment.
12. Fire alarm master station or control panel.

SECTION 16620 – PANELBOARDS

1.1 GENERAL
A. Submittals: Product Data for each type of panelboard, accessory item, and component specified.
B. Listing and Labeling: Provide products specified in this Section that are UL listed and labeled.
C. Comply with NFPA 70.
D. Comply with NEMA PB 1.

1.2 PRODUCTS
A. Panelboard Enclosures: Flush– or surface–mounted cabinets as indicated. NEMA PB 1, Type 1, unless otherwise indicated to meet environmental conditions at installed location.
1. Kitchen Areas: NEMA 250, Type 4X, stainless steel.
B. Bus: Hard drawn copper of 98 percent conductivity.
C. Main and Neutral Lugs: Compression type.
D. Equipment Ground Bus: Adequate for feeder and branch–circuit equipment ground conductors. Bonded to box.
E. Service Equipment Approval: Listed for use as service equipment for panelboards with main service disconnect switch.
F. Feed–through Lugs: Sized to accommodate feeders indicated.
G. Distribution Panelboards: Features include the following:
1. Doors: In panelboard front, except, omit in trims–switch panelboard, unless otherwise indicated. Secure door with multi–type latch with tumbler lock, all keyed alike.
H. Fusible Switch: NEMA KS 1, Type HD, clips to accommodate specified fuses, handle lockable.

3.3 EXECUTION
A. Install panelboards and accessory items according to NEMA PB 1.1.
B. Install filler plates in unused spaces.
C. Wiring in Panelboard Gutters: Arrange conductors into groups, and bundle and wrap with wire ties after completing load balancing.
D. Identify field–installed wiring and components and provide warning signs as specified in Division 16 Section "Basic Electrical Materials and Methods."
E. Panelboard Nameplates: Label each panelboard with engraved laminated–plastic or metal nameplates mounted with corrosion–resistant screws.
F. Provide ground continuity to main electrical ground bus as indicated.
G. Tighten electrical connectors and terminals, including grounding connections, according to manufacturer's published torque–tightening values. Where manufacturer's torque values are not indicated, use those specified in UL 486A and UL 486B.
H. Field Quality Control: Perform acceptance tests as follows:
1. Make insulation–resistance tests of each panelboard bus, component, and connecting supply, feeder, and control circuits.
2. Make continuity tests of each circuit.
3. Procedures: Perform each visual and mechanical inspection and electrical test stated in NETA ATS.

SECTION 16475 – FUSES

PART 1 GENERAL

1.1 SUBMITTALS
A. Submittals: Submit Product Data according to the Conditions of the Contract and Division 1 Specification Sections.
B. Comply with NFPA 70 for components and installation.

1.2 PRODUCTS
A. Cartridge Fuses: NEMA FU 1, nonrenewable cartridge fuse; class as specified or indicated; current rating as indicated; voltage rating consistent with circuit voltage.

1.3 EXECUTION
A. Examine utilization equipment nameplates and installation instructions to verify proper fuse locations, sizes, and characteristics.
B. Main Service: Class L, fast acting.
C. Main Feeders: Class L, time delay.
D. Motor Branch Circuits: Class RK1, time delay.
E. Other Branch Circuits: Class RK5, non–time delay.
F. Install fuses in flexible devices as indicated. Arrange fuses so fuse ratings are readable without removing fuse.
G. Install spare fuse cabinet where indicated.
H. Install typewritten labels on inside door of each fused switch to indicate fuse replacement information.

SECTION 16510 – INTERIOR LIGHTING

PART 1 GENERAL

1.1 SECTION INCLUDES
A. Interior luminaires and accessories.
B. Emergency lighting units.
C. Exit signs.
D. Ballasts.
E. Lamps.
F. Luminaire accessories.

1.2 SUBMITTALS
A. Shop Drawings: Indicate dimensions and components for each luminaire that is not a standard product of the manufacturer.

1.3 EXTRA MATERIALS
A. Provide two of each plastic lens.
B. Provide two of each ballast type.

PART 2 PRODUCTS

2.1 LUMINAIRES
A. Furnish products as specified in schedule or drawings
B. Substitutions: As approved by the Engineer.

2.2 INCANDESCENT EMERGENCY LIGHTING UNITS
A. Manufacturers:
1. See Light Fixture schedule.
B. Description: Self–contained emergency lighting unit.
C. Battery: 12 volt, type, with 1.5 hour capacity.
D. Battery Charger: Dual–rate type, with sufficient capacity to recharge discharged battery to full charge within twelve hours.
E. Lamps: 12 watts minimum, Halogen sealed beam type or as specified.
F. Housing: Polycarbonate in the finished common areas and steel housing in the unfinished areas.
G. Indicators: Provide lamps to indicate AC ON and RECHARGING. Provide voltmeter.
H. Provide TEST switch to transfer unit from external power supply to integral battery supply.
I. Electrical Connection: Conduit connection.
K. Input Voltage: 120 volts.

2.3 EXIT SIGNS
A. Manufacturers:
1. See Light Fixture Schedule.
B. Description: AC, LED Exit sign
C. Housing: Die Cast Aluminum.
D. Directional Arrows: Universal type for field adjustment.
E. Mounting: Universal, for field selection.
F. Input Voltage: 120 volts.

2.4 BALLASTS
A. Fluorescent Ballast:
1. Advance.
2. Motorola.
3. Source Quality Control: Certify ballast design and construction by Certified Ballast Manufacturers,Inc.

2.5 LAMPS
A. Incandescent Lamp Manufacturers:
1. Osram/Sylvania.
2. General Electric.
3. Phillips.
B. Fluorescent Lamp Manufacturers:
1. Osram/Sylvania.
2. General Electric.
3. Phillips.
C. Provide lamp type specified for luminaire.
D. Reflector Lamp Beam Patterns: ANSI C78.379.

PART 3 EXECUTION

3.1 EXAMINATION
A. Examine substrate and supporting grids for luminaires.
B. Examine each luminaire to determine suitability for lamps specified.

3.2 INSTALLATION
A. Install in accordance with manufacturers instructions.
B. Install suspended luminaires using pendants supported from swivel hangers. Provide pendant length required to suspend luminaire at indicated height.
C. Support luminaires larger than 2 x 4 feet, size independent of ceiling framing.
D. Locate recessed ceiling luminaires as indicated on reflected ceiling plan.
E. Install surface mounted luminaires and exit signs plumb and adjust to align with building lines and with each other. Secure to prohibit movement.
F. Exposed Grid Ceilings: Support surface mounted luminaires on grid ceiling directly from building structure. Provide auxiliary members spanning ceiling Ts to support surfaces. Fasten surface mounted luminaires to ceiling T using suitable clips.
G. Install recessed luminaires to permit removal from below.
H. Install recessed luminaires using accessories and fire stopping materials to meet regulatory requirements for fire rating.
I. Install clips to secure recessed grid supported luminaires in place.
J. Install wall mounted luminaires, emergency lighting units and exit signs at height as indicated on Drawings.
K. Install accessories furnished with each luminaire.
L. Connect luminaires, emergency lighting units and exit signs to branch circuit using flexible conduit.
M. Make wiring connections to branch circuit using building wire with insulation suitable for temperature conditions within luminaire.
N. Bond products and metal accessories to branch circuit equipment grounding conductor.
O. Install specified lamps in each luminaire, emergency lighting unit and exit sign.

3.3 LUMINAIRE SCHEDULE
A. As shown on drawings.

SECTION 16521 – EXTERIOR LIGHTING

1.1 GENERAL
A. Submittals: Product Data for each type of lighting unit indicated, arranged in order of lighting unit designation. Include data on features, accessories, templates for anchor bolts and reinforcement, and finishes.
B. Luminaires and Accessories: Listed and labeled as defined in NFPA 70, Article 100, for their indicated use, location, and installation conditions by a testing agency acceptable to authorities having jurisdiction.
C. Comply with ANSI C2.
D. Comply with NFPA 70.

1.2 PRODUCTS
A. Luminaires: Comply with ESNA RP–8 for parameters of lateral light distribution patterns.
B. Sheet Metal Components: Corrosion–resistant aluminum.
C. Housings: Rigidly formed, weather– and light–tight enclosures with filter/breather for enclosed luminaires.
D. Doors, Frames, and Other Internal Access: Arranged to permit relamping without use of tools. Arrange doors, frames, lenses, diffusers, and other pieces to prevent accidental falling during relamping and when mounted in operating positions. Make doors easy to remove for cleaning or replacing lens. Arrange to disconnect ballast when door opens.
E. Exposed Hardware Material: Stainless steel.
F. Plastic Parts: Resist yellowing and change due to aging, exposure to heat, and ultraviolet radiation.
G. Lenses and Refractors: Heat– and aging–resistant, resilient gaskets to seal and cushion lens and refractor in luminaire doors.
H. Photoelectric Contact Relays: Single throw, mounted in luminaire housing, arranged to fail in the on position, and factory set to turn light unit on at 1.5 to 3 fc (16 to 32 lx) and off at 4.5 to 10 fc (48 to 108 lx) with 15–second minimum time delay.
I. High–Intensity–Discharge Ballasts: Comply with ANSI C82.4. Constant wattage autotransformer or regulating high–power–factor type.
1. Ballast Fuses: One in each ungrounded supply conductor.
2. Single–Lamp Ballasts: Minimum starting temperature of minus 40°C.
3. Average Life: Not reduced by open–circuit operation.
4. Noise: Noise rating of B or better.
J. Lamps: Comply with the standard of the ANSI C78 series that is applicable to each type of lamp. Provide luminaires with indicated lamps of designated type, characteristics, and wattage. Where a lamp is not indicated for a luminaire, provide medium wattage lamp recommended by manufacturer for luminaire.
K. Luminaire Support Components: Comply with AASHTO LTS–3 for pole or other support structures, brackets, arms, appurtenances, bases, and anchorage and foundation.
L. Finish: Match finish of pole/support structure for arm, bracket, and tenon mount materials.
M. Mountings, Fasteners, and Appurtenances: Corrosion–resistant and compatible with support components.
N. Pole/Support Structure Bases: Anchor type with hold–down or anchor bolts, leveling nuts, and bolt covers.
O. Steel Poles: Tubing complying with ASTM A 500, Grade B, carbon steel with a minimum yield of 46,000 psig (317 MPa); one–piece construction up to 40 feet (12 m) in length with access handhole in pole wall.
1. Cable Support Grip: Wire–mesh type with rotating attachment eye, sized for diameter of cable and rated for a minimum load equal to weight of supported cable times a 5.0 safety factor.
P. Steel Mast Arms: Fabricated from NPS 2 (DN50) black steel pipe, continuously welded to pole attachment plate with span and rise as indicated.
Q. Concrete for Pole Foundations: Comply with Division 3 Section "Cast–in–Place Concrete" for 3000–psig (20.7–MPa), 28–day compressive strength.
R. Finishes: Comply with NAAMM's "Metal Finishes Manual for Architectural and Metal Products" for recommendations for applying and designating finishes.

1.3 EXECUTION
A. Construct concrete foundations according to Division 3 Section "Cast–in–Place Concrete."
1. Comply with manufacturer's templates for reinforcement and for anchor bolts, nuts, and washers.
B. Lamp luminaires with indicated lamps according to manufacturer's written instructions. Replace malfunctioning lamps.

Fire Alarm System Specification

Scope: The Electrical Contractor shall install complete, a fully supervised, closed circuit, UL listed "code 3" Addressable Fire Alarm System as Manufactured by National Time & Signal Corporation, Mount Michigan. Alternate manufacturers must be listed, stating the "add" or "deduct" from base bid.

Sequence of Operation: The activation of any initiating device shall:
Sound all audible appliances in a "code 3 temporal" pattern until manually reset.
Flash all visual appliances continuously.
Release all smoke barrier doors.
Identify the device initiating the alarm condition via an 80 character LCD display.
Record in nonvolatile historical memory, the condition causing the occurrence and the time and date of the occurrence.
Activate alarm contacts required for Central Station monitoring.
Duct smoke detectors shall shut down the associated unit.
Living unit smoke detectors are 120 VAC Single Station and not connected to the fire alarm system. Multiple detectors within any living unit shall be interconnected.

Trouble Sequence of Operation: Any open, ground, power loss, low battery or disarrangement of system wiring shall:

Sound an audible tone within the control panel.
Display a visual indication within the control panel until the condition is cleared.
Activate trouble contacts required for Central Station monitoring.
Record in nonvolatile historical memory, the condition causing the occurrence and the time and date of the occurrence.

Equipment model numbers as follows:

Fire Alarm Control Panel: #4002–FACP 256 point addressable.
Manual Station: #2000–SMS single action.
Smoke Detector: #2000–PHOTO photoelectric.
Living Unit Smoke Detector: #2120F 120V with 9vdc battery backup and form C contacts .
Living Unit Smoke Detector: #2190CS 120V with 9vdc battery backup and 177cd strobe.
(Handicap units)
Duct Smoke Detector: #2000–DD–PHOTO–R.
Heat Detector: #2000–TEMP.
Monitor Module: #2000–MONITOR
Control Module: #2000–CTRL, I/O programmable form "C" contacts.
Horn/Strobe: #SG–CWS multi–candela visual appliance.
Strobe: #SG–CWS multi–candela visual appliance.

All wiring shall be in installed in strict compliance with NEC Article 760.

Submittals shall be provided to A/E for review prior to start of rough.

Plans shall be submitted to the Authority Having Jurisdiction for complete review within two weeks of contract award. All associated fees shall be included in bid. Fire Alarm System installers must be licensed by the City of Detroit to obtain permit.

Final Inspection: Upon completion, a complete inspection of the system shall be conducted per NFPA requirements. Verification and results of this inspection shall be forwarded to the A/E in writing for review.

END OF ELECTRICAL SPECIFICATIONS

NEUMANN SMITH & ASSOCIATES

Architecture
Planning
Interior Design

400 Galleria Officentre
Suite 555
Southfield, Michigan 48034

248-352-8310
FAX 248-352-1821
NS@neumannsmith.com

Metro Lofts

Royal Oak, Michigan

Consultant

ETS ENGINEERING, INC.
ENERGY TECHNOLOGY SOLUTIONS
418 W. 12 S. Washington
P.O. Box 1116
Royal Oak, MI 48068-1116
Off: 248 744-0360
Fax: 248 744-0367
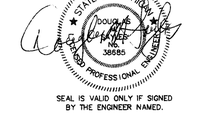
Seal